Operation Manual

INKJET PRINTER

TXF330-800

Operation Manual

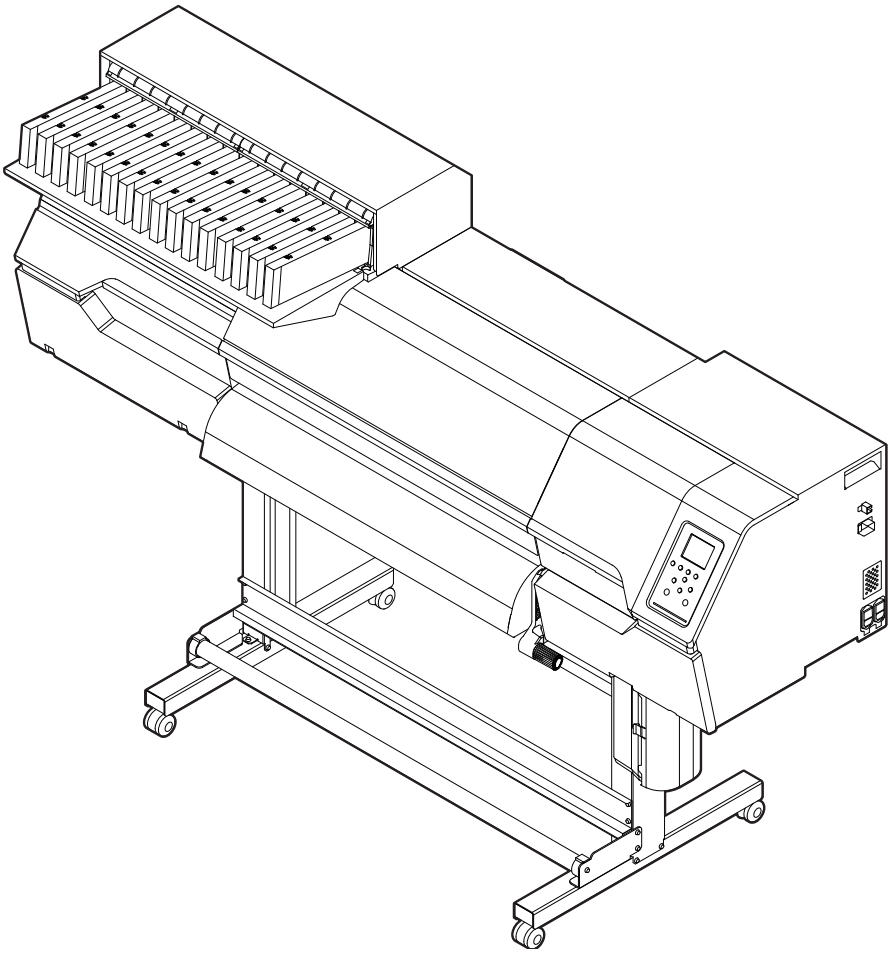

You can also download the latest manual from official website.

MIMAKI ENGINEERING CO., LTD.

https://mimaki.com/

D203944-11

Original instructions

TABLE OF CONTENTS

Introduction 5
To Ensure Safe Use 7
Symbol Marks 7
Usage Precautions 8
Notes on Handling Ink or any Other Liquid Used with the Machine 11
Ink Specifications 13
Restrictions Concerning the Expiration Date of Ink Used in the Machine 14
Installation Precautions 15
Installation Space 16
..... 16
Safety Interlocks 17
Warning Label 18

Chapter 1 Before Use

1.1 Part Names and Functions 22
Front 22
Rear and Right Side View 23
Carriage 24
Capping station 24
Pinch Rollers and Grit Rollers 24
Platen 25
Ink status lamp 26
Media Sensor 26
Power Supply Switch 27
Operating Panel 28
1.2 Connecting the Power Cable 31
Turning On the Power 32
Turning Off the Power 33
1.3 Connecting a PC to the Product 34
Using a LAN Cable 34
Using a USB Cable 35
1.4 System Configuration 37
Installing the Mimaki Driver 38
Installing RIP Software 38
Obtaining Color Profiles 38
Setting Up RIP Software 38
1.5 Ink Replacement Method 40
When Ink Level Low or Ink Near End is displayed 40
When Ink End is Displayed 42
Replacing Ink 43

Chapter 2 Printing

2.1 Print Process 48
2.2 Adjusting Print Head Height 51

2.3 Performing Maintenance Before Printing 53
2.4 Loading the Media 54
Media 54
About the Feed-Out Unit 55
Loading the Roll Media 57
2.5 Setting the Heater Temperature 62
2.6 Test Printing 63
Changing the Layout Direction for Test Printing 63
Ejection Failures 64
2.7 Head Cleaning 65
2.8 Auto-correction 66
Auto-correction procedure 66
2.9 Feed Correction 67
Feed Correction Procedure 67
2.10 Correcting the Drop Position 68
Drop Position Correction Procedure 68
2.11 Preparing RIP data 70
2.12 Printing 72
Changing the origin 72
Starting Printing 72
Stopping Printing (Data Clear) 73
2.13 Cutting the media 74

Chapter 3 Setup

3.1 Media Setting Menu 76
3.2 Maintenance Menu 79
Registering Nozzle Recovery 81
Nozzle Check 83
3.3 Function Setting Menu 84
3.4 Environment Setting Menu 86
3.5 Machine Status Menu 88

Chapter 4 Maintenance

4.1 Maintenance Precautions 90

4.2 Maintenance Methods 91
Maintenance Items and Timing 91
Ink Maintenance 92
Wiper Cleaning 93
Cap Rubber Cleaning 95
NCU Cleaning 96
Carriage Underside Cleaning 97
Automatic Correction Sensor (DAS) Cleaning 98
Ink Discharge Channel Cleaning 99
Media Sensor Cleaning 100
Media Holder Cleaning 101
Platen Cleaning 101
Washing Tray Cleaning 102
Cover (Exterior) Cleaning 103
When this Printer is Left Unused for a Long Time 104
4.3 Replacement of Consumable Item 106
Wiper Replacement 106
Cap Replacement 107
Exhaust Fan Filter Replacement 109
Pinch Roller Replacement 110
Media Holder Replacement 111
Media Cutter Replacement 113
Waste Ink Tank Replacement 115
4.4 Ink Cartridge Correction 118
Correcting the ink cartridge weight 118

Chapter 5 Troubleshooting

5.1 Troubleshooting 120
The power does not turn on. 120
Printing is not possible. 120
The media jams or the media is dirty. 120
The media keeps coming out 121
Image defects occur. 121
Ejection failures occurred 122
The heater temperature does not rise to the specified value. 124
The ink has leaked out 124
5.2 Problems Causing Messages to Appear 125
Warning Messages 125
Ink Error 127
Error Message 129
SYSTEM HALT 133

Chapter 6 Appendix

6.1 Specifications 136
6.2 LICENSE Library 139

Introduction

Thank you for purchasing the Inkjet printer TxF330-800.

Read this operating manual ("this document" hereinafter) thoroughly and make sure you understand its contents to ensure safe and correct use of the product.

Please note that the illustrations contained in this manual are intended to show functions, procedures, or operations and may sometimes differ slightly from the actual machine.

Adobe, the Adobe logo, Acrobat, Illustrator, Photoshop, and PostScript are the trademarks or registered trademarks of Adobe Incorporated in the United States and other countries.

Other company and product names mentioned herein are the trademarks or registered trademarks of the respective companies in Japan and in other countries.

Unauthorized reproduction of any portion of this document is strictly prohibited.

© 2026 MIMAKI ENGINEERING Co., Ltd.

DISCLAIMERS

- MIMAKI ENGINEERING REJECTS ALL LIABILITY FOR DAMAGE ARISING DIRECTLY OR INDIRECTLY FROM THE USE OF THE TxF330-800 ("THIS MACHINE" HEREINAFTER), WHETHER OR NOT THE PRODUCT IS FAULTY.
- MIMAKI ENGINEERING REJECTS ALL LIABILITY FOR DAMAGE, DIRECT OR INDIRECT, TO MATERIALS CREATED WHILE USING THIS MACHINE.
- USING THIS MACHINE IN CONJUNCTION WITH DEVICES OTHER THAN THOSE RECOMMENDED BY MIMAKI ENGINEERING MAY RESULT IN FIRE OR ACCIDENTS. SUCH INCIDENTS ARE NOT COVERED BY THE PRODUCT WARRANTY. MIMAKI ENGINEERING REJECTS ALL LIABILITY FOR DAMAGE, DIRECT OR INDIRECT, ARISING FROM SUCH INCIDENTS.
- USE ONLY GENUINE MIMAKI ENGINEERING INK AND MAINTENANCE LIQUID. USE OF OTHER PRODUCTS MAY RESULT IN FAILURES OR REDUCE PRINT QUALITY. SUCH INCIDENTS ARE NOT COVERED BY THE PRODUCT WARRANTY. MIMAKI ENGINEERING REJECTS ALL LIABILITY FOR DAMAGE, DIRECT OR INDIRECT, ARISING FROM SUCH INCIDENTS.
- DO NOT ATTEMPT TO REFILL THE INK CARTRIDGES WITH UNAUTHORIZED INK. SUCH INCIDENTS ARE NOT COVERED BY THE PRODUCT WARRANTY. MIMAKI ENGINEERING REJECTS ALL LIABILITY FOR DAMAGE, DIRECT OR INDIRECT, ARISING FROM SUCH INCIDENTS.

TV and radio interference

- The machine emits high-frequency electromagnetic radiation while operating. Under certain circumstances, this may result in TV or radio interference. We make no guarantee that this machine will not affect special radio or TV equipment.

If radio or TV interference occurs, check the radio or TV reception after turning off the machine. If the interference disappears when the power is turned off, the machine is likely to be the cause of the interference.

Try any of the following solutions or combinations of these solutions:

- Change the orientation of the TV or radio antenna to find a position where interference does not occur.
- Move the TV or radio away from this machine.
- Plug the TV or radio into a power outlet on a power circuit other than the power circuit to which this machine is connected.

FCC (Federal Communications Commission) regulations

The machine has been tested and certified to comply with restrictions applying to Class A digital devices under Part 15 of the FCC regulations. These restrictions are designed to provide suitable protection from harmful interference when the printer is used in commercial environments.

This product may generate, use, or emit radio frequency energy and may cause harmful interference with radio communications if not installed or used in accordance with the operating manual.

Use of this product in residential areas may cause harmful interference. If so, the user is responsible for rectifying such interference.

- Use only the cables recommended by Mimaki Engineering when connecting to the machine. Use of other cables may cause the product to exceed the restrictions stipulated by FCC regulations. To maintain compliance with FCC regulations, use the cables recommended by Mimaki Engineering.

To Ensure Safe Use

Symbol Marks

Explanation		
⚠WARNING	Warning	Indicates a potential hazard that may result in death or serious injury if handled improperly or if instructions are disregarded.
⚠CAUTION	Caution	Indicates a potential hazard that may result in minor or moderate injury if handled improperly or if instructions are disregarded.
NOTICE	Notice	Indicates a potential hazard that may result in property damage if handled improperly or if instructions are disregarded.
	Warning sign	Indicates something that requires attention. Warning specifics are drawn inside the symbol.
	Mandatory action sign	Indicates an action that must be carried out. The specifics of the mandatory action are drawn inside the symbol.
	Prohibition sign	Indicates a prohibited action. The specifics of the prohibited action are drawn inside the symbol.
Important!	Important	Indicates important information related to use of this machine.
	Tip	Indicates useful reference information.
	Reference information	Indicates the corresponding page for related information.

Usage Precautions

In the event of abnormal conditions

⚠ WARNING

- In the event of abnormal conditions such as smoke or unusual odor, turn off the main power immediately and unplug the power cable. Continuing to use the machine under these conditions may result in failure, electric shock, or fire. Once you have confirmed that smoke is no longer being emitted, contact your local dealer or our service office. Never attempt to repair the machine yourself, which is hazardous.

⚠ CAUTION

- Immediately wipe off any ink, maintenance liquid, waste ink, or other liquid used with the product that comes into contact with your skin. Then wash using soap, and rinse with plenty of water. Failure to wash off ink may result in skin inflammation. If your skin becomes irritated or painful, seek medical attention immediately.
- If ink, maintenance liquid, waste ink, or any other liquid used in the product comes into contact with your eyes, rinse immediately with plenty of clean water. Rinse for at least 15 minutes. If you are wearing contact lenses and can remove them easily, rinse them under clean running water for at least 15 minutes before removing them. Be sure to also rinse the undersides of your eyelids. Failure to rinse off ink may result in blindness or impaired vision. If your eyes become irritated or painful, seek medical attention immediately.
- If ink, maintenance liquid, waste ink, or any other liquid used in the product enters your mouth or is swallowed, gargle with water immediately. Do not induce vomiting. Seek medical attention promptly. Inducing vomiting may cause liquid to enter the airway.
- If a large amount of vapor is inhaled, move to a well-ventilated area, keep warm, and rest in a posture that allows easy breathing. If the condition does not improve, seek medical attention promptly.

NOTICE

- If an ink leak occurs, turn off the main power immediately and unplug the power cable. Then, contact your local dealer or our service office.

Power supply precautions

⚠ WARNING

- Use the power cable provided. Otherwise there is a risk of failure, electric shock, or fire. The power cable provided is exclusive for the machine, and must not be used for other electrical equipment.
- Always hold the plug when removing the power cable. Pulling out the power cable may damage the cable, leading to failure, electric shock, or fire.
- Do not use the machine with dust accumulated on the power plug. Otherwise there is a risk of failure, electric shock, or fire.
- Take care to prevent metals from touching the power plug blades. Otherwise there is a risk of failure, electric shock, or fire.
- Do not damage or modify the power cable. Do not place heavy objects on, heat or stretch it. Doing so may damage the cable, leading to electric shock or fire.
- Do not use extension cords or power strips. Otherwise there is a risk of failure, electric shock, or fire.
- Do not use the power cable if it is damaged or broken or if the core wire is exposed. Otherwise there is a risk of failure, electric shock, or fire.
- Do not handle the power plug with wet hands. Disregarding this precaution may result in electric shock.

- Plug the power cable plug into a grounded power outlet. Otherwise there is a risk of failure, electric shock, or fire.
- When installing electrical outlets, perform grounding work to prevent electric shock. All electrical work (Class C grounding work; formerly Type 3 grounding work) must be handled by a licensed electrician.

NOTICE

- Do not turn off the main power supply. Turning off the main power supply will disable the automatic maintenance function (including nozzle clogging prevention function and ink discharge channel cleaning function). This increases the risk of ejection failures (such as nozzle clogging or deflection).

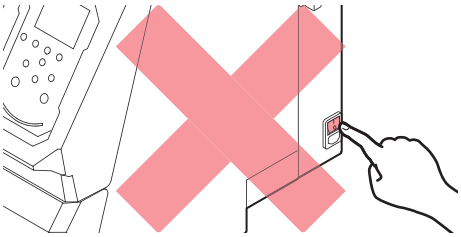

- Use the machine with a power supply that meets specifications.
- Be sure to plug the power cable into a power outlet close to the machine. Insert the power plug blade securely.
- When connecting the power cable, check the input voltage of the power outlet and the capacity of the breaker. Also, connect each cable to a separate power source with an independent breaker. Connecting to power outlets linked with the same breaker will cause the breaker to trip.

Caution regarding moving parts

⚠CAUTION

- Keep parts of the body such as the face and hands away from moving parts. Also keep clothing (e.g., loose clothing and accessories) that may impede work away from the machine. Failure to do so may result in injury.
- Long hair should be tied back. Failure to do so may result in injury.

Do not disassemble or repair

⚠WARNING

- Do not attempt to disassemble or repair this machine. Otherwise there is a risk of failure, electric shock, or fire.

Heater

⚠CAUTION

- The heater becomes extremely hot. Do not touch with bare hands.

NOTICE

Other usage precautions

⚠WARNING

- Keep children away from the machine.

NOTICE

- Do not pull the media when the clamp lever is lowered (the media is clamped). Doing so may damage the machine.

Important!

- The underside of the media may become soiled depending on how the printed media has been stored and the media type. Perform a test beforehand to check that the media does not transfer ink to the underside of the adjacent media.

Disposing of the product

⚠CAUTION

- Please contact your local retailer or service agent.
- When disposing of the product yourself, contact an industrial waste disposal operator or dispose of the product in accordance with local laws and regulations.

Notes on Handling Ink or any Other Liquid Used with the Machine

Precautions regarding ink, maintenance liquid, or other liquids used with this machine are included with the containers. Thoroughly read them and make sure you understand the contents.

- Be sure to read the safety data sheet (SDS) before use. https://mimaki.com/supply/sds/

⚠CAUTION

- Pay close attention to ventilation and be sure to wear safety glasses, gloves, and a mask when handling ink, maintenance liquid, waste ink, or other solutions used with the machine. Leaking ink may adhere to the skin or get into the eyes or mouth.

- Do not subject cases containing ink to strong shock or violent shaking. Do not attempt to refill the ink. Leaking ink may adhere to the skin or get into your eyes or mouth.

- Do not disassemble cases containing ink. Leaking ink may adhere to the skin or get into your eyes or mouth.

- Do not store ink, maintenance liquid, or other liquids used with the machine in locations where children may enter.

- When disposing of ink, maintenance liquid or other liquid used with the product, or containers or non-woven fabric contaminated with ink or other liquid, contact an industrial waste disposal operator or dispose of the product in accordance with the local laws and regulations.

NOTICE

- Do not store ink, maintenance liquid, or other liquids used with the machine in locations exposed to direct sunlight.
- Do not store ink, maintenance liquid, or other liquids used with the machine in environments where cutting fluid or other volatile substances (such as amines or modified amine alcohol) are present in significant quantities. Storage in such places increases the risk of failure or ejection failures (e.g., nozzle clogging or deflection).
- Do not use ink, maintenance liquid, or other liquids used with this machine with other printers. Doing so may cause failure.

- Be sure to store them in a low place no higher than 1 m above the floor. Otherwise there is a risk of scattering if the containers fall.
- Store in tightly sealed containers.
- Store in a cool, dark place.
  (1) Store ink in a place where ink does not freeze. Using defrosted ink may deteriorate ink constituents and reduce print quality.
  (2) When ink is moved from a cold place to a warm place, leave it in the environment where the machine is installed for at least three hours before using it.
  (3) Open the container just before installing it, and use it up as quickly as possible. If it is opened and left for an extended period of time, print quality may be reduced.

- Do not touch the metal parts of the ink IC chip. Static electricity may damage the ink IC chip, and dirt or damage may cause the ink IC chip read error.

- Printing is disabled if a different ink IC chip is used.

Ink Specifications

Item		Details
Type		Dedicated water-based pigment ink (Mimaki Engineering genuine product)
Color		Cyan (C) Magenta (M) Yellow (Y) Black (K) Sky blue (SB) Pale pink (PP) White (W)
Form		Cartridge
Ink capacity		Color: 600 ml, White: 500 ml
Expiration date		As indicated on the ink pack. However, after opening, it should be consumed within three months, even if before the expiration date.
Storage temperature	When stored	10 - 35 °C (average daily temperature) However, not more than 1 month at 30 °C • Ink quality may deteriorate if stored outside these conditions.
	During transportation	1 - 40 °C However, not more than 120 hours at 60 °C, and not more than 1 month at 40 °C • Where possible, avoid storing in cold locations below 0 °C and hot locations above 40 °C. • Ink quality may deteriorate if stored outside these conditions.

Restrictions Concerning the Expiration Date of Ink Used in the Machine

Example: When the expiration date is April 20xx

- May 20xx: Replace with new ink or use up as quickly as possible. Printing is possible.
- June 20xx: Replace with new ink or use up as quickly as possible. Printing is possible.
- July 20xx: Printing is not possible.

- The message appears on the display.

Important!

- The ink expiration date is indicated on the ink container. Expired ink may cause ejection failures or alter the color tone. Printing is possible even if the ink has passed its expiration date. Nevertheless, we recommend replacing with new ink or using up as quickly as possible.

Installation Precautions

⚠ WARNING

- Do not install the machine in a place close to fire.
- Do not place flower vases, pots, cups, containers containing cosmetics, chemicals or water, or small metal items on or close to the machine. If they enter the machine, there is a risk of failure, electric shock, or fire.

- Do not install this machine in humid locations or locations where it may be exposed to splashing water. Otherwise there is a risk of failure, electric shock, or fire.

- Do not install the machine in a place where children may enter.

- When performing work that requires disabling safety functions (such as safety interlocks) duringinstallation or maintenance, be sure to review and follow the warnings listed for each step inadvance. Improper handling may result in serious injury.

⚠ CAUTION

- A ventilation system must be provided if the machine is installed in a poorly ventilated area or sealed room.
- Be sure to observe the following points regarding exhaust port installation:
  (1) Exhaust port installation must conform to local environmental, health, and safety (EHS) guidelines.
  (2) If the exhaust port is fitted with a shutoff valve, the valve must be open when the machine is in use.

NOTICE

- Do not install the machine in a dusty location. Dust ingress inside the machine increases the risk of failure or ejection failures (e.g., nozzle clogging or deflection).
- Do not install the machine where it is exposed to drafts, such as near an air conditioner. This increases the risk of dust ingress inside the machine.
- Do not install the machine in unstable locations or locations subject to vibration. This increases the risk of failure or ejection failures (such as nozzle clogging or deflection).
- Do not install the machine in a location subject to direct sunlight.
- Do not install the machine in a location subject to extreme temperature fluctuations. This increases the risk of failure or ejection failures (such as nozzle clogging or deflection).
- Do not install the machine in a location where large equipment generating noise is situated.
- Do not install the machine in locations where photographic fixing agent vapors, acid fumes (such as acetic acid or hydrochloric acid), cutting fluid, or other volatile substances (such as amines or modified amine alcohol) are present. Installing in such environments increases the risk of ink solidifying on the print head surface, causing failure or ejection failures (e.g., nozzle clogging or deflection).

- Operating environment: 20 to 30 °C (68 to 86 °F), 35 to 65 %RH (no condensation)
- Temperature range in which accuracy is guaranteed: 20 to 25 °C (68 to 77 °F)

Installation Space

Provide the following space around the machine to allow safe and proper replacement of ink and media:

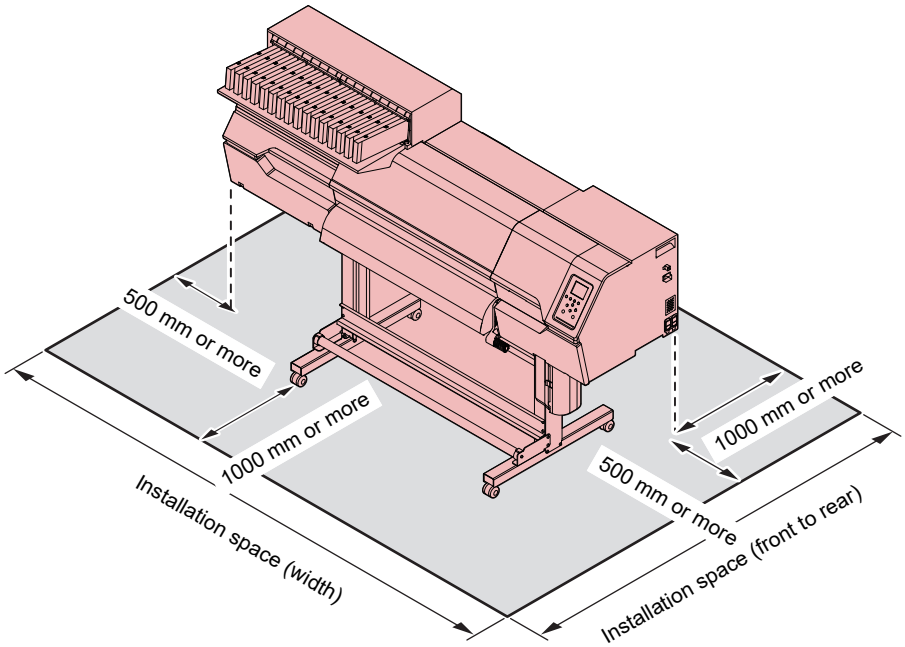

Item	TxF330-800
Width*1	At least 3,084 mm (2,084 mm)
Depth*1	At least 2,700 mm (700 mm)
Height*1	(1389 mm)
Weight	161 kg

*1. The figures in parentheses indicate machine dimensions.

Contact your local dealer or our service office. There is a risk of failure or damage to the machine if you try to move it yourself.

Safety Interlocks

The machine is equipped with interlocks to ensure safety during use.

Printing will abort if you open the covers while printing is underway. The RIP data will need to be resent.

- Safety interlock locations

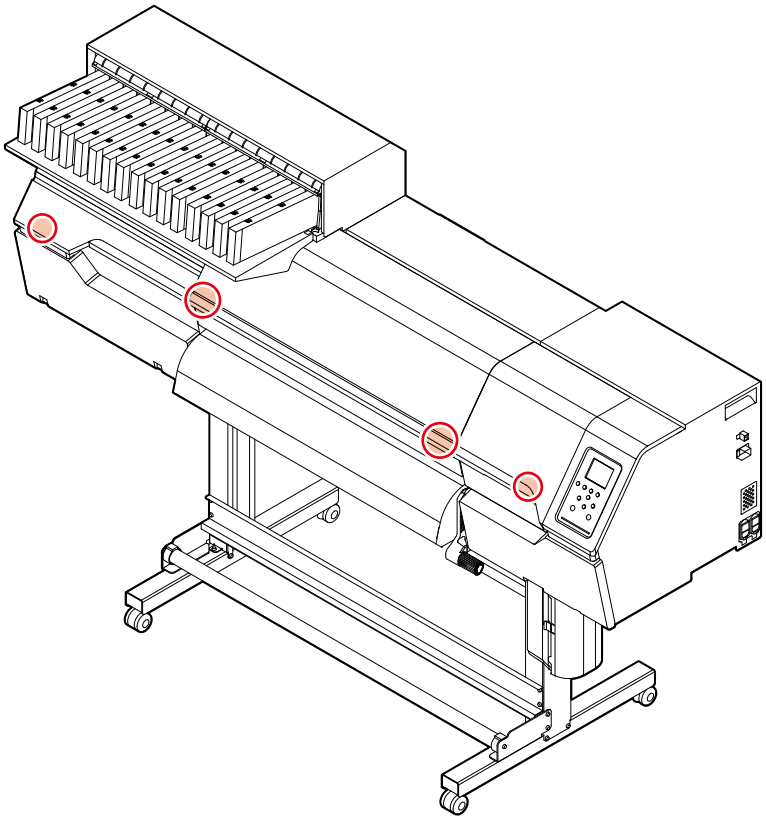

Warning Label

Make sure you fully understand the details indicated on the various warning labels.

If any of the warning labels becomes dirty and illegible or peel off, contact your local dealer or our service office to request new warning labels.

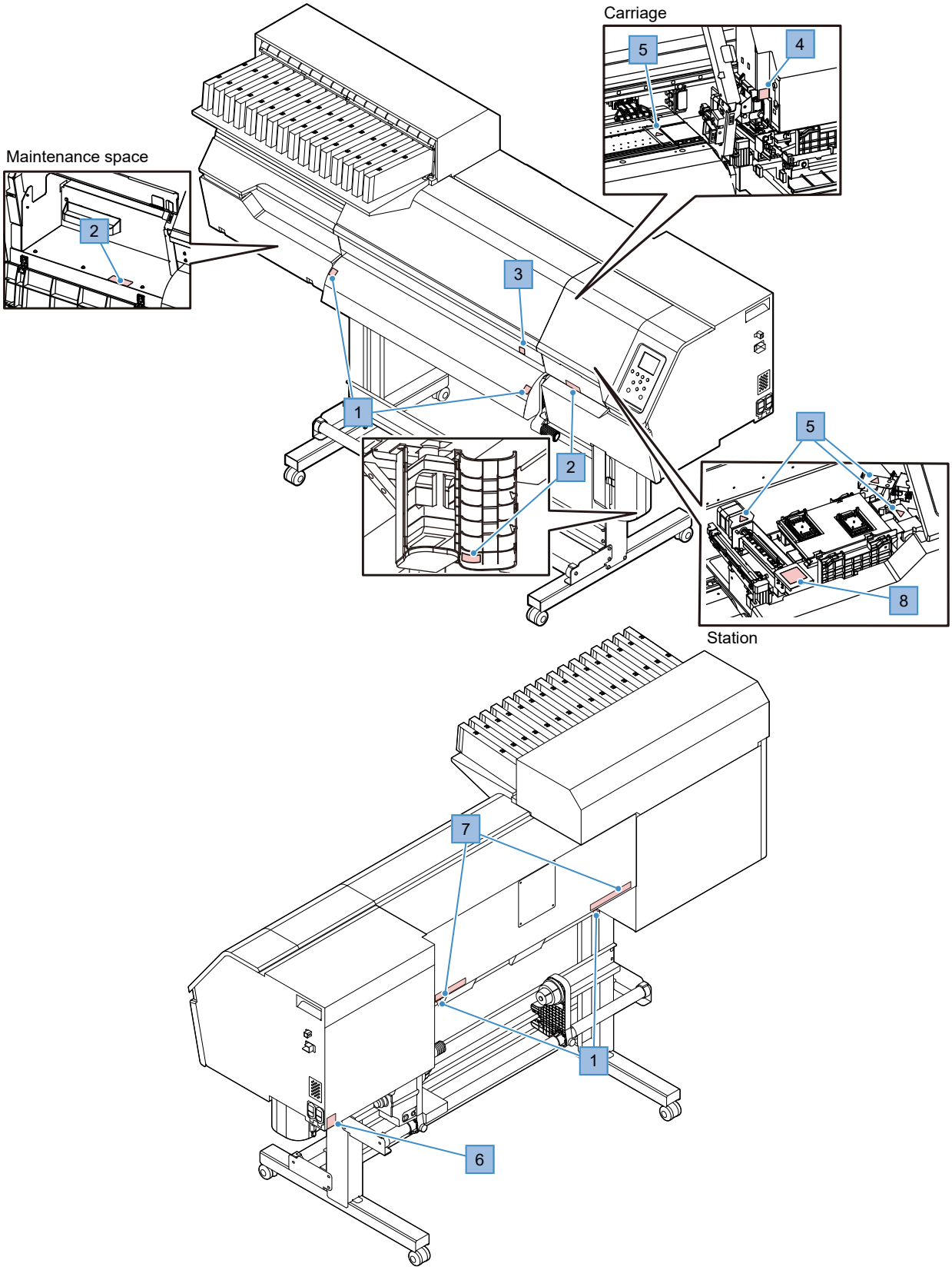

No.	Order code	Label	Details
1	M903239		Indicates hot parts. Do not touch the heater while it is energized to avoid the risk of burns.
2	M903330		Leaking ink may adhere to the skin or get into the eyes. Wear safety glasses and gloves while working.
3	M907833		Indicates dangerous moving parts. Keep fingers and body away from the carriage as there is a risk of injury from crushing or shearing when the carriage is operated.
4	M903405		Indicates the cutter parts. Keep your fingers and body away from the cutter, since there is a risk of injury from cutting if the cutter operates.
5	M906144		Indicates hot parts. Do not touch the heater or motor while it is energized to avoid the risk of burns.
6	M907935		There is a high-voltage section inside. Do not touch it to avoid risk of electric shock.
7	M905811		Indicates dangerous moving parts. Keep fingers and body away from the carriage or rollers as there is a risk of injury from crushing or shearing when the carriage or rollers are operated.
8	M920624		Indicates dangerous moving parts. Keep fingers and body away from the wiper as there is a risk of injury from crushing or shearing when the wiper is operated.

Chapter 1 Before Use

This chapter

This chapter describes information essential before use, such as part names.

Part Names and Functions 22
- Front 22
- Rear and Right Side View 23
- Carriage 24
- Capping station 24
- Pinch Rollers and Grit Rollers 24
- Platen 25
- Ink status lamp 26
- Media Sensor 26
- Power Supply Switch 27
- Operating Panel 28

Connecting the Power Cable 31
- Turning On the Power 32
- Turning Off the Power 33

Connecting a PC to the Product 34
- Using a LAN Cable 34
- Using a USB Cable 35

System Configuration 37
- Installing the Mimaki Driver 38
- Installing RIP Software 38
- Obtaining Color Profiles 38
- Setting Up RIP Software 38

Ink Replacement Method 40
- When Ink Level Low or Ink Near End is displayed 40
- When Ink End is Displayed 42
- Replacing Ink 43

1.1 Part Names and Functions

Front

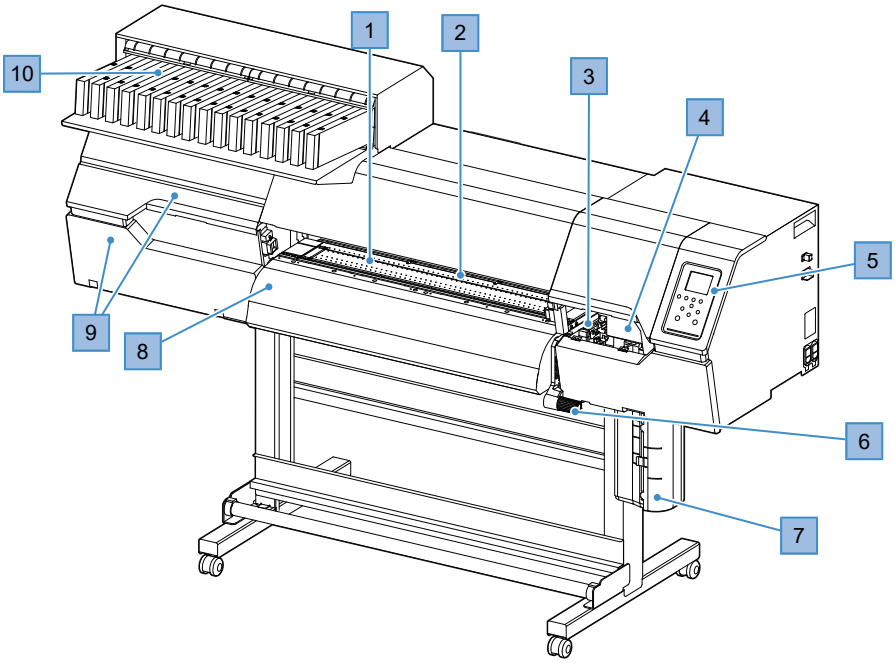

No.	Name	Overview
1	Platen	Print area. The platen is equipped with a heater. Helps prevent ink bleeding. Adjust the temperature setting to suit the type of media used. "Platen"(P. 25) "Setting the Heater Temperature"(P. 62)
2	Pinch roller Grit roller	The pinch rollers and grit rollers are used to grip and feed the media. "Pinch Rollers and Grit Rollers"(P. 24)
3	Capping station	Consists of parts such as caps, wipers, and an NCU for monitoring print head nozzle conditions. "Capping station"(P. 24)
4	Carriage	Consists of a print head, jam sensor, and media cutter. "Carriage"(P. 24)
5	Operating Panel	Includes operating keys and displays indicating various settings and other items. "Operating Panel"(P. 28)
6	Clamp lever (front)	Lowering the clamp lever secures the media. Raising the clamp lever releases the media.
7	Waste Ink Tank	Container for waste ink. "Waste Ink Tank Replacement"(P. 115)
8	Post-heater	Allows ink to dry after printing. Adjust the temperature setting to suit the type of media used. "Setting the Heater Temperature"(P. 62)
9	Maintenance cover	Open the cover to perform maintenance on the carriage underside. Printing and the automatic maintenance function are not possible while the covers are open.
10	Ink Supply Unit	The Ink cartridge is inserted here to supply ink to the print head. "Ink Replacement Method"(P. 40)

Rear and Right Side View

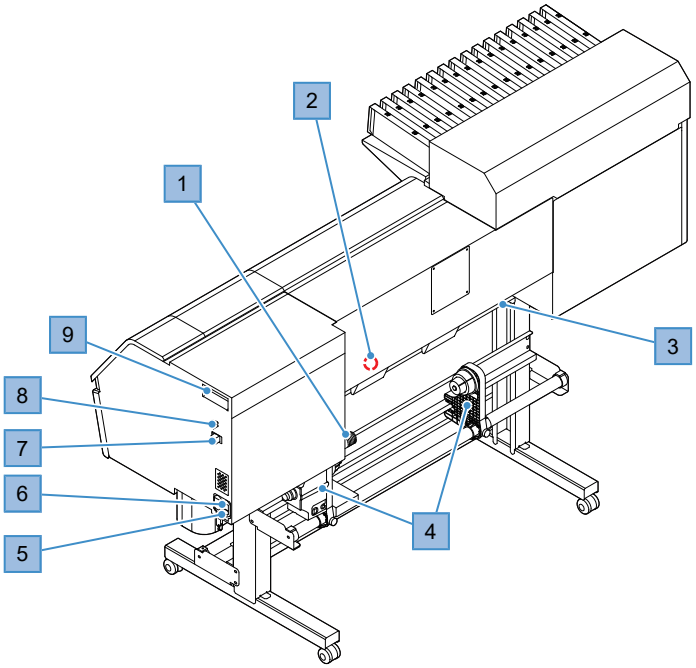

No.	Name	Overview
1	Clamp lever (rear)	Linked to the clamp lever at the front.
2	Media Sensor	Detects whether media is present. ☞ "Media Sensor"(P. 26)
3	Preheater	Preheats the media before printing to suppress rapid temperature change. Adjust the temperature setting to suit the type of media used. ☞ "Setting the Heater Temperature"(P. 62)
4	Feeding unit	Holds the roll media before printing. Compatible with 2- and 3-inch paper cores.
5	AC inlet	Use the power cable provided. ☞ "Connecting the Power Cable"(P. 31)
6	Main power switch	The main power supply for the machine. To prevent print head discharge defects (such as nozzle clogging or deflection), do not turn off the main power supply. ☞ "Turning On the Power"(P. 32)☞ "Turning Off the Power"(P. 33)
7	LAN port	Used when using the network function. ☞ "Using a LAN Cable"(P. 34)
8	USB port	Connects to PC via a USB interface cable. ☞ "Using a USB Cable"(P. 35)
9	Maintenance liquid cartridge	Used to automatically feed maintenance liquid to the cap, to prevent ink dripping onto the wiper and solidifying, and to prevent ink solidifying inside the ink discharge channel during maintenance.

Carriage

The carriage includes a print head for ejecting ink, and a jam sensor for stopping the carriage when media clogs. Printing occurs as ink is ejected while traversing left and right.

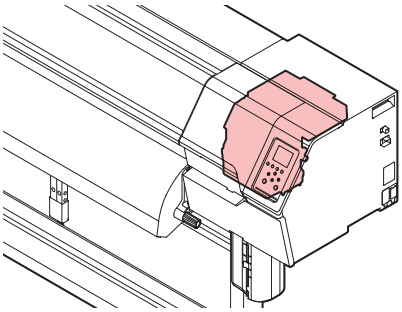

Capping station

The capping station includes caps for keeping the print head nozzle surface from drying out, a wiper required for print head maintenance, and an NCU for monitoring print head nozzle conditions.

The NCU (Nozzle Check Unit) automatically checks whether the nozzle is clogged. Setting various functions enables automatic print head cleaning or printing using other nozzles.

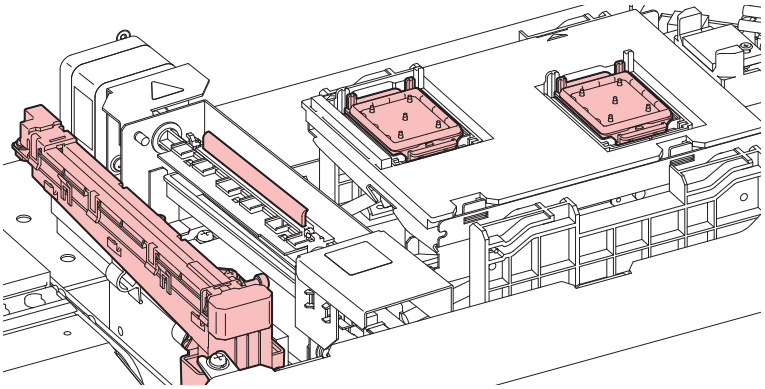

Pinch Rollers and Grit Rollers

The pinch rollers and grit rollers are used to grip and feed the media.

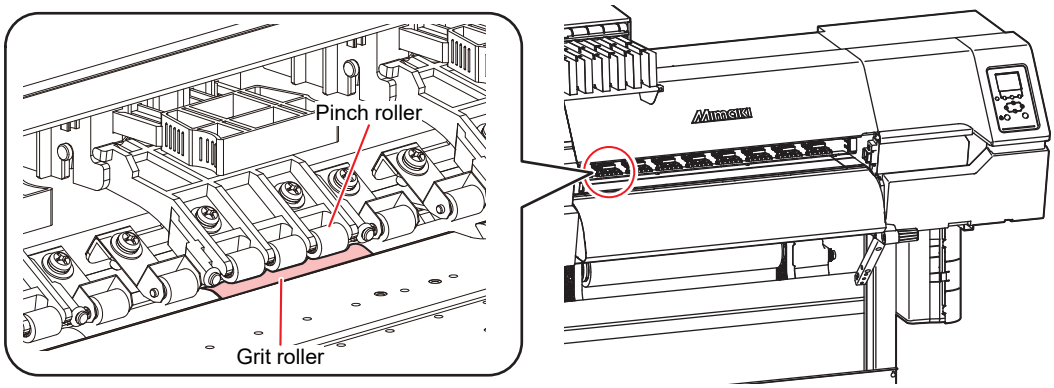

When the machine is not in use, raise the clamp lever to separate the pinch rollers from the grit rollers.

- Leaving the pinch rollers lowered may cause them to become deformed and prevent media from being fed correctly.
- Leaving media loaded will subject it to force from the pinch rollers, which may leave pinch roller marks on it.

- Attach the clamp changeover sliders to the pinch rollers at the left and right-hand ends of the media. The pinch rollers can be raised by attaching clamp changeover sliders. (Do not raise pinch rollers other than those at the left and right edges of the media.) This prevents gripping the left and right-hand ends of the media for consistent feeding.

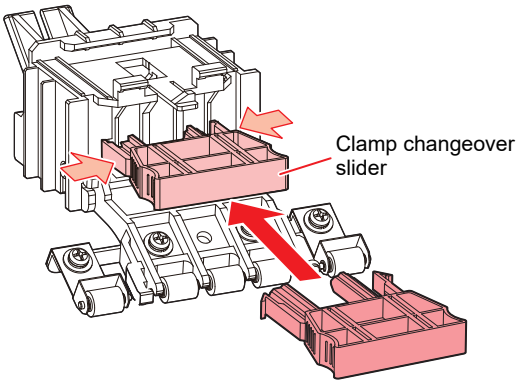

Platen

Print area. The platen secures the media under vacuum pressure. This also features a cutting slot for cutting the media.

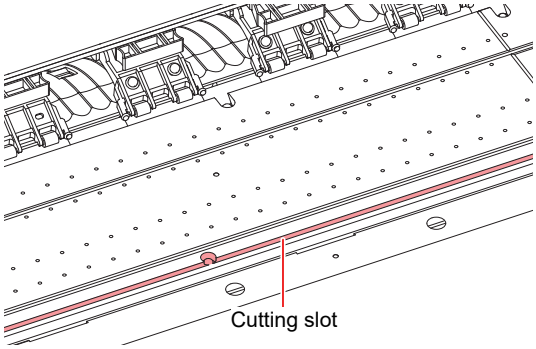

Ink status lamp

You can check the status of the ink by looking at the lamp on the ink supply unit.

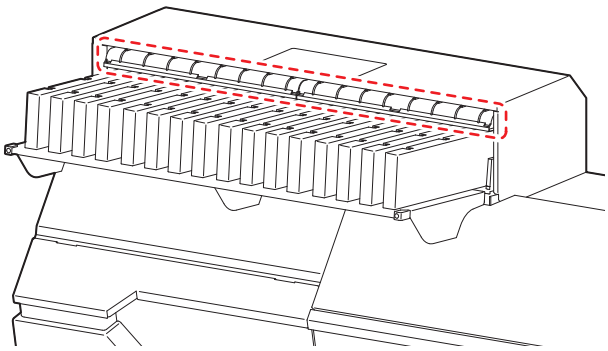

Color	Status	Overview
-	Off	No error
Blue	Illuminated	Ink is being supplied (no error)
Yellow	Illuminated Flashing	Printing is possible. One of the following errors has occurred: (☞ "Ink Error"(P. 127)) • INK NEAR-END • Ink has expired (1 months passed) • INK LVL LOW • InkCartrigeCheck
Red	Illuminated	Printing is not possible. One of the following errors has occurred: (☞ "Ink Error"(P. 127)) • Ink End • INK LVL END • The ink IC chip is not inserted. • Other ink errors
	Flashing	Printing is not possible. • Ink has expired (2 months passed)
Green	Flashing	Circulation operation in progress. Do not remove the cartridge.

Media Sensor

The media sensor detects the presence/absence of media. The sensor must be covered by the media to detect the media width.

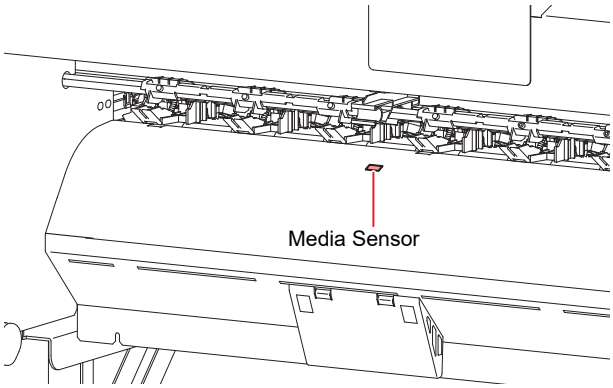

Power Supply Switch

Main power switch

Located on the right side of the machine.

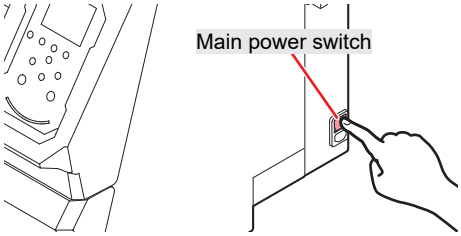

- Do not turn off the main power supply. Turning off the main power supply will disable the automatic maintenance function (including nozzle clogging prevention function and ink discharge channel cleaning function). This increases the risk of ejection failures (such as nozzle clogging or deflection).

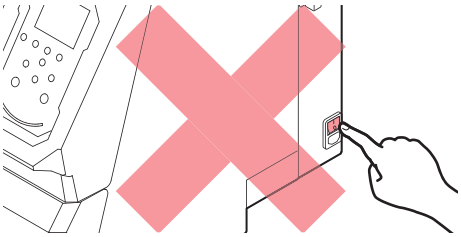

[END/POWER] key

The [END/POWER] key is the key normally used to turn the power on and off.

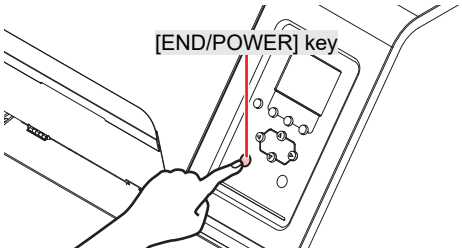

- Close the front cover and maintenance covers. Leaving any of the covers open will disable the automatic maintenance function (including nozzle clogging prevention function and waste ink draining channel cleaning function). This will increase the risk of failure or ejection failures (e.g., nozzle clogging or deflection).

Operating Panel

This is used to control the product and make/change settings.

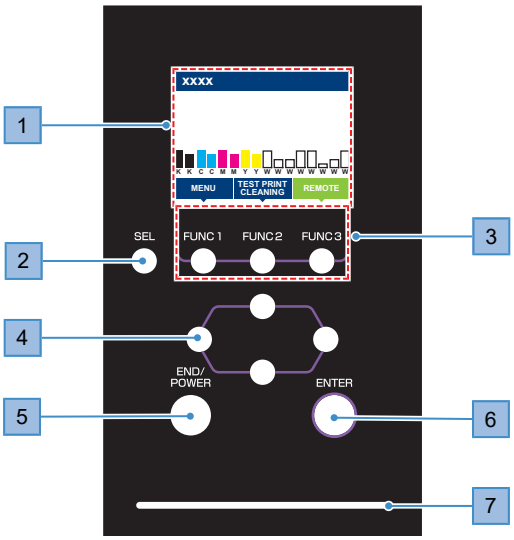

No.	Name	Overview		
1	Display	☞ "Display"(P. 29)		
2	[SEL] key	Selects the function for the corresponding [FUNCTION] key.		
3	[FUNCTION] key	Used for test printing, head cleaning, and editing settings ☞ "[FUNCTION] key"(P. 30)		
4	[JOG] key ▲▼◀▶	Used to move the carriage, feed media, and select settings		
5	[END/POWER] key	Used to cancel the last setting entered, return to the previous level of the setting menu, or to turn power on and off • Illuminates in blue when the power is on. ☞ "Turning On the Power"(P. 32) • To turn off the power, hold down the key. ☞ "Turning Off the Power"(P. 33)		
6	[ENTER] key	Used to move to the next level menu and to confirm settings. This can also be used to display product information. ☞ "Displaying Machine Information (Local Guidance)"(P. 30)		
7	Status lamp	This lamp indicates the machine status.		
		Off		Indicates LOCAL mode. Used for test printing, maintenance, and settings
		Light blue	Illuminated	Indicates REMOTE mode. The product is in standby to receive print data.
			Flashing	Indicates printing is underway. This also flashes to indicate test printing—for example, when printing built-in patterns.
		Blue	Illuminated	Indicates that data remains to be printed. Switch to REMOTE mode and start printing
		Red	Flashing	An error has occurred. Refer to the error code list and take appropriate action. ☞ "Error Message"(P. 129)
			Illuminated	A system error (SYSTEM HALT) has occurred. Contact our service office. ☞ "SYSTEM HALT"(P. 133)

Display

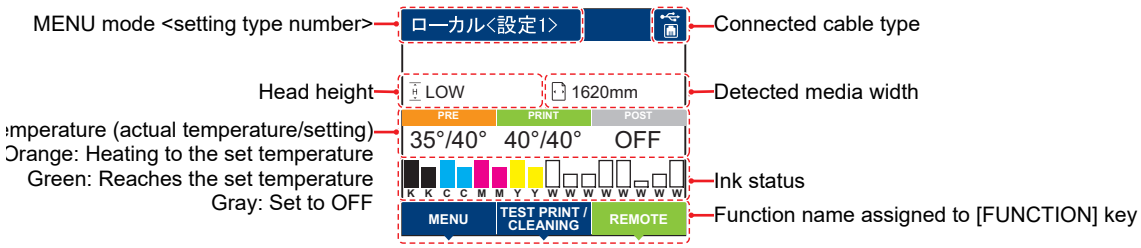

● Heater temperature

The heater status is indicated by different colors.

- Orange: Adjusting to temperature setting.
- Green: At temperature setting.
- Gray: Heater is turned off.

MENU mode

Four menu modes are available.

Name	Overview
LOCAL mode	Used for test printing, maintenance, and settings
REMOTE mode	Prints the print data received from a PC.
MENU mode	Press the [MENU] on the LOCAL mode screen to switch to MENU mode. This is used to set various functions.
NOT-READY mode	Status before media is detected

Ink status

Ink pack status such as remaining ink levels and ink errors are indicated by icons.

Icon	Overview			
M	Displays remaining ink levels using a 4-stage icon.			
	Full	1/4 used	1/2 used	3/4 used
M	Displayed when the machine is nearly out of ink. Very little ink remains. Prepare fresh ink.			
M	Printing is not possible. Displayed when ink is depleted or an ink error has occurred. ☞ "Ink Error"(P. 127)			

[FUNCTION] key

This section describes the functions and roles assigned to the [FUNCTION] key.

Icon	Overview
MENU	Displays the various menu screens. ☞ "Setup"(P. 75)
TEST PRINT CLEANING	Displays maintenance functions such as test printing and cleaning.
REMOTE	Switches from LOCAL mode to REMOTE mode.
ADJUST	Displays adjustment functions such as feed adjustment and drop position adjustment.
HEATER	Displays the Heater Temperature Setup screen.
DATA CLEAR	Clears received data.
LOCAL	Used to switch from REMOTE mode to LOCAL mode
CUT	Used to cut media
<<	Used to move to the previous menu screen
>>	Used to move to the next menu screen
OK	Used to close the confirmation screen in response to prompts or other messages
OFF	Used to disable functions
↓	Indicates that the function is assigned. Displays settings and functions.
✓	Used to enable or disable multiple items

Displaying Machine Information (Local Guidance)

Press the [ENTER] key on the LOCAL mode screen to display the following information.

- Ink information: Displays ink type, remaining ink levels, and ink errors.
- Ink IC chip registration information: Displays the information registered on the ink IC chip.
- Warning: Displays all warnings issued.
- Information: Displays information such as media width, head height, product serial number, firmware version, command version, and LAN connection status.
- Nozzle check: Displays the number of nozzles detected as clogged in the nozzle check.

1.2 Connecting the Power Cable

1 **Check to confirm that the main power supply is turned off.**

2 **Insert the cable band to the machine.**

3 **Plug the power cable into the inlet of the machine.**

4 **Secure the power cable to the cable band.**

- Pass the power cable through the clamp and clamp until it clicks into place.

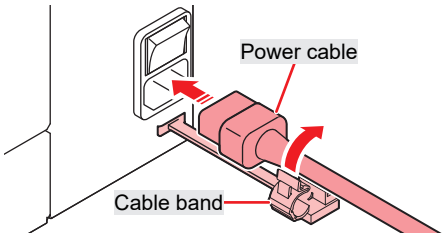

5 **Plug the power plug into the power outlet.**

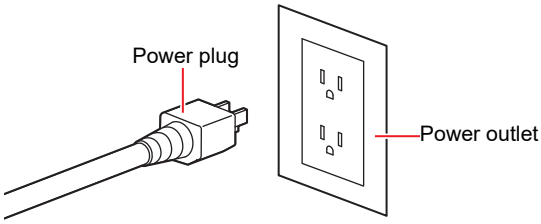

- Do not handle the power plug with wet hands. Disregarding this precaution may result in electric shock.

Turning On the Power

1 **Check to confirm that the main power supply is turned on.**

- If the main power supply switch is not turned on, set to "I".

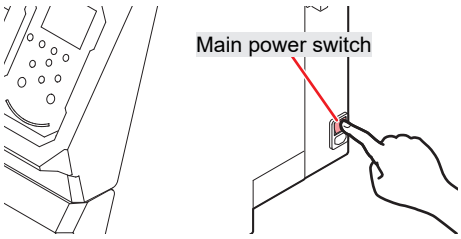

2 **Press the [END/POWER] key to turn on power.**

- The firmware version appears on the display, and the initial operation is executed. LOCAL mode is then set and the machine is ready for use.

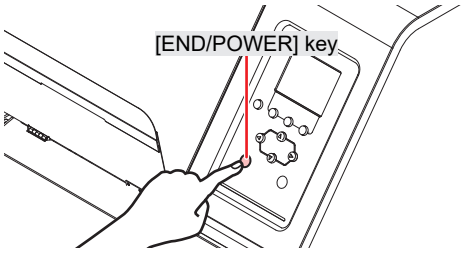

3 **Turn on the power for the connected PC.**

- Close the front cover and maintenance covers. Leaving any of the covers open will disable the automatic maintenance function (including nozzle clogging prevention function and waste ink draining channel cleaning function). This will increase the risk of failure or ejection failures (e.g., nozzle clogging or deflection).

Turning Off the Power

- Check the following when turning off power:
  (1) The front cover and maintenance covers are closed.
  - Leaving any of the covers open will disable the automatic maintenance function (including nozzle clogging prevention function and waste ink draining channel cleaning function).

  (2) The carriage has returned to the capping station.
  - If not, the print head nozzle may dry out, resulting in ejection failures (such as nozzle clogging or deflection).

  (3) Data is not being received

  (4) No errors have occurred.
  - ☞ "Problems Causing Messages to Appear"(P. 125)

1 **Turn off the power to the PC connected.**

2 **Hold down the [END/ POWER] key.**

- A power off confirmation screen appears. Press the [ENTER] key to turn the power off.

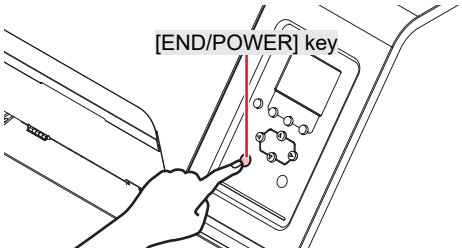

- Do not turn off the main power supply. Turning off the main power supply will disable the automatic maintenance function (including nozzle clogging prevention function and ink discharge channel cleaning function). This increases the risk of ejection failures (such as nozzle clogging or deflection).

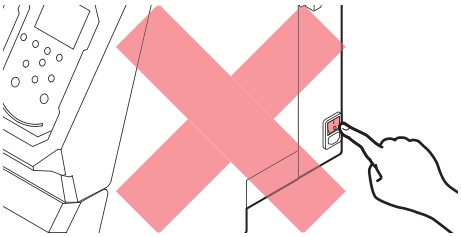

1.3 Connecting a PC to the Product

Connect the machine to the RIP PC. The following cables can be used:

1. ☞ "Using a LAN Cable"(P. 34) **(Recommended)**
2. ☞ "Using a USB Cable"(P. 35)

Important! **When using the USB cable**

- Data may be transferred to the machine too slowly, **causing the carriage to pause at the left-hand or right-hand end** during printing.

Using a LAN Cable

Connect a PC to this product using a LAN cable. Insert a LAN cable until it engages with a click.

- Do not unplug the cable while data is being transferred.

Important!

- If you connect a computer with Wi-Fi enabled to a printer using an Ethernet cable, issues such as the connection between the printer and the RIP software being lost or printing stopping may occur, which can cause the network to become unstable. In this case, please check the printer's IP address.
- If your IP address begins with 169.254... and the printer's AutoIP setting is turned on, please use one of the following methods to stabilize the network connection.
  (1) Turn off the Wi-Fi settings on your computer.
  (2) Set the printer's AutoIP to OFF, and assign static IP addresses to both the computer and the printer.

Network Connection Precautions

Make sure the network is set up as follows: Printing is not possible if the network is not set up correctly.

- Use a Category 6 or 6A LAN cable.
- The PC used to transfer print data must be located on the same network as this product. This product cannot be connected via a router.
- Use a 1000BASE-T compatible computer or switching hub. Printing requires 1000BASE-T support.

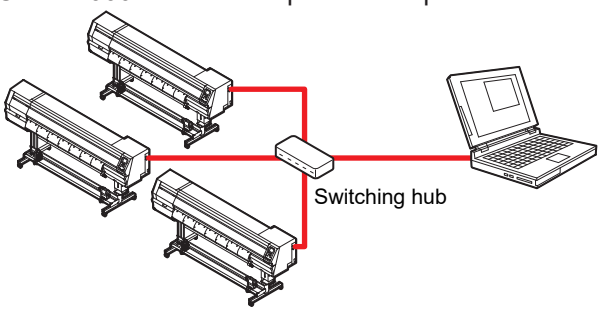

Checking the LAN connection

1 Check the display on this product.

- Local guidance can be used for checking. ☞ "Displaying Machine Information (Local Guidance)"(P. 30)
- Printing is not possible if "100Mbps", "10Mbps", or "No Connect" is displayed. EVENT MAIL can be used. Event Email Function Settings

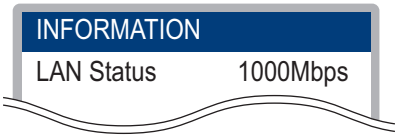

2 Check the lamp on the LAN connector.

- The LAN connector lamp illuminates when the machine is running.

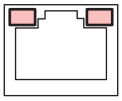

Color	Status	Overview
Green	Illuminated	Connected via 1000BASE-T
	Off	Connected via a network other than 1000BASE-T • 1,000 Mbps is not supported if only the orange lamp is illuminated or flashing. Check the specifications for the PC, peripheral devices, and cable.
Orange	Illuminated	Linked up (connected).
	Flashing	Data being received
	Off	Link down (not connected)

Using a USB Cable

Connect a PC to this product using a USB interface cable.

- Do not unplug the cable while data is being transferred.

- Use RIP software that supports the USB interface.

- If the PC does not have a USB port, contact your local distributor, our sales office, or service center.

Important! **When using the USB cable**

- Data may be transferred to the machine too slowly, **causing the carriage to pause at the left-hand or right-hand end** during printing.

USB Connection Precautions

When connecting more than one TxF330-800 to a PC

The TxF330-800 may not be correctly recognized.

If the PC has more than one USB port, try connecting to a different USB port to check whether the product is correctly recognized. If the product is still unrecognized even when connected to a different USB port, use a commercially-available USB active repeater cable.

● When extending the USB cable

Use a commercially-available USB active repeater cable. However, make sure that the combined length of the USB cable and the USB active repeater cable does not exceed 20 m.

If the connection is extended with a USB cable, data transfer speeds to the machine may be reduced, causing the carriage to pause at the left or right end during printing.

● USB high-speed mode peripheral devices

It may not be possible to recognize USB peripheral devices if USB high-speed mode peripheral devices (e.g., USB memory, USB HDD devices) are connected to the PC to which the product is connected. Data transfer speeds to the machine may be reduced if external USB hard disk drives or similar devices are connected. This may cause the carriage to pause at the left or right end during printing.

● Unplugging USB memory devices

When unplugging USB memory devices from the PC to which this product is connected, use "Stop" in "Safely removing hardware" before unplugging. Otherwise, an [ERROR 201 Command Error] will occur.

1.4 System Configuration

Use RIP software to request to print data created using applications like Illustrator or Photoshop.

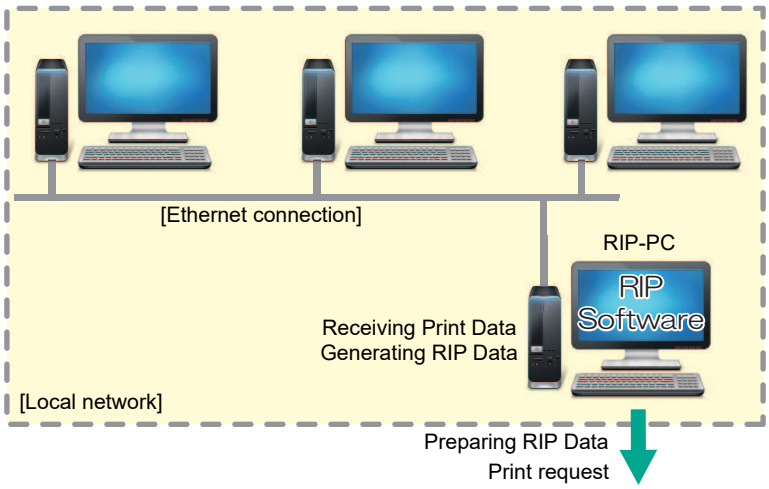

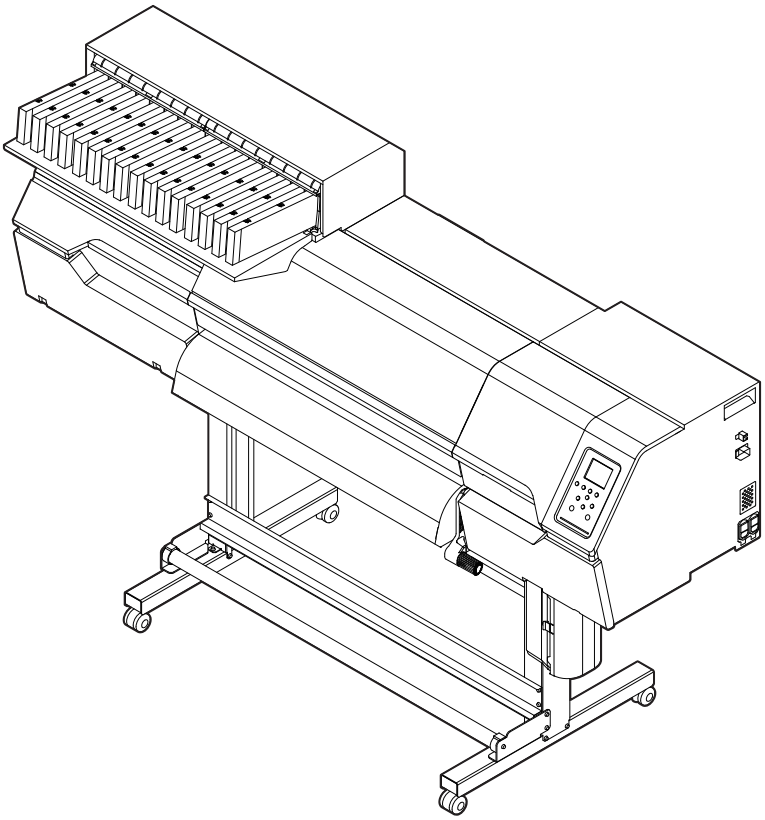

Installing the Mimaki Driver

1 **Download the Mimaki driver from our website.**

- https://mimaki.com/download/inkjet.html
  [TxF330-800] > [Driver/Utility]

2 **Install the MIMAKI driver.**

Installing RIP Software

The explanation here applies to MIMAKI RIP software (RasterLink).

1 **Install RasterLink.**

- The following icon appears on the PC desktop once the software has been installed.

- For more information, refer to the RasterLink installation guide. https://mimaki.com/download/software.html

- Once installed, activate the license for Rasterlink. Otherwise, "Profile Update" will not start.

Obtaining Color Profiles

Print quality (e.g., tone, bleeding) will vary depending on the media and ink set. To maintain consistent print quality, select a color profile that suits the media and ink set.

- The RasterLink Series includes a function allowing color profiles to be downloaded and installed directly from the Internet. For more information, refer to "Installing Profiles" in the RasterLink Series installation guide.
  https://mimaki.com/download/software.html
  [RasterLink Series used] > [Manuals]
- Color profiles for Mimaki RIP software (RasterLink) are available on the Mimaki website.
  https://mimaki.com/download/inkjet.html
  [TxF330-800] > [Profile]

Setting Up RIP Software

The explanation here applies to MIMAKI RIP software (RasterLink).

1 **Launch RasterLink.**

- The [Printer Management] screen appears.
- To add a new model, launch RasterLink, then select [Environment] > [Printer Management] for registration.

2 Register TxF330-800.

(1) Click [Add].

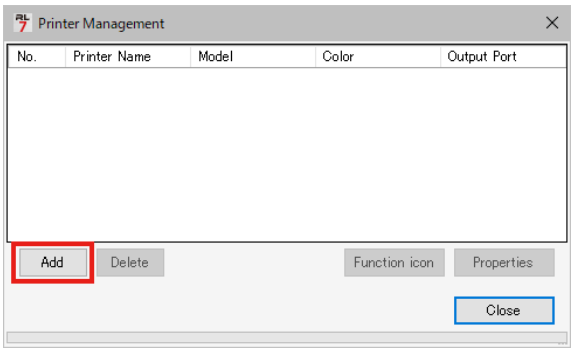

(2) Set the specifics for TxF330-800.

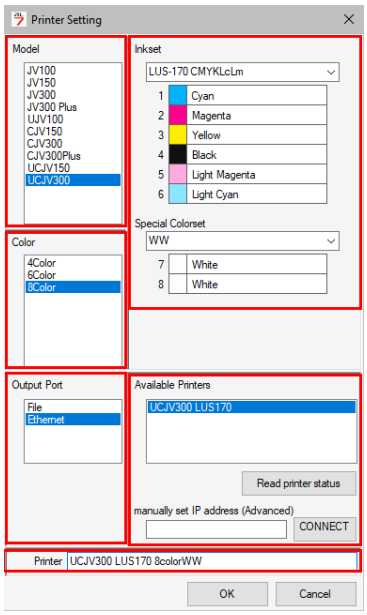

- Model: Select the model.
- Color: Select the ink set filled.
- Output Port: Select the cable connected.
- Available Printers: Select TxF330-800 connected.
- Printer: Enter a name as required.

(3) Click [OK].

- A confirmation screen appears.

(4) Click [Yes].

- Printer registration starts.

- For more information, refer to the RasterLink installation guide. https://mimaki.com/download/software.html

1.5 Ink Replacement Method

When Ink Level Low or Ink Near End is displayed

The machine records the amount of ink consumed. Discrepancies may sometimes occur between the actual ink consumption. If a warning message appears, follow the instructions on the operating panel screen.

Important!

- If [Ink cartridge check] is displayed, open the ink cartridge lid, then fold over the ink pack. If printing is continued without folding over the ink pack, ink may stop being ejected.

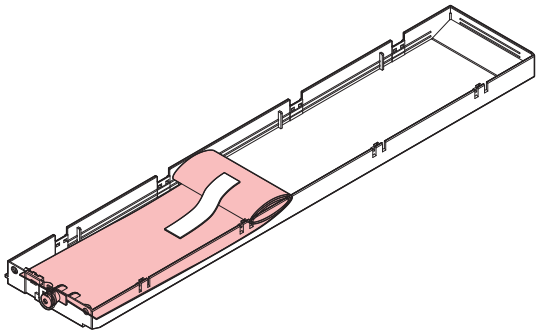

- Points to check when folding over ink packs
  (1) Make sure that the ink pack is not bulging excessively.
  (2) Make sure the ink pack connector is firmly inserted into the slot in the ink cartridge case.
  (3) Make sure that no ink remains in the folded section.

OK	No Good

Message	Display condition *1	Printer operation		Corrective action
		Print	Cleaning	
Ink cartridge check	• Occurs when the remaining ink level in the cartridge is below 100 ml.	Yes	Yes *2	1. Remove the ink cartridge, then weigh it. ☞ "Correcting the ink cartridge weight"(P. 118) 2. Enter the weight into the machine. ☞ "Correcting the ink cartridge weight"(P. 118) 3. Open the ink cartridge lid, then fold over the ink pack. 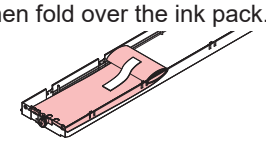 Set the ink pack as shown here and enter the cartridge weight
Ink Lvl End (1st time)	• Occurs when the remaining ink level in the cartridge is below 65 ml after "Ink cartridge check" has been displayed. – Not displayed if the ink pack has been folded over and the cartridge weight corrected (☞ "Correcting the ink cartridge weight"(P. 118)) after "Ink cartridge check" was displayed.	No	No	
Ink Level Low	• Occurs when the remaining ink level in the cartridge is below 60 ml.	Yes	Yes *2	1. Remove the ink cartridge, then weigh it. ☞ "Correcting the ink cartridge weight"(P. 118) 2. Enter the weight into the machine. ☞ "Correcting the ink cartridge weight"(P. 118)
INK NEAR-END	• Occurs when the remaining ink level is below 60 ml after correcting the cartridge weight (☞ "Correcting the ink cartridge weight"(P. 118)).	Yes	Yes *2	
Ink Lvl End	• Occurs when the remaining ink level in the cartridge is below 30 ml.	No	No	
Replace Ink Pack (Ink End)	• Occurs when the remaining ink level is between 30 and 36 ml after correcting the cartridge weight (☞ "Correcting the ink cartridge weight"(P. 118)).	No	No	1. Replace the ink pack. ☞ "Replacing Ink"(P. 43)

*1. The remaining ink level values are guidelines.

*2. Printing cannot be continued. However, printing can be continued if there is more than one cartridge of the same ink color and at least one cartridge for which no warnings have occurred.

When Ink End is Displayed

The ink has run out. Replace with new Ink pack.

Thoroughly read the following and make sure you understand its contents.
☞ "Notes on Handling Ink or any Other Liquid Used with the Machine"(P. 11)

- Pay close attention to ventilation and be sure to wear safety glasses, gloves, and a mask when handling ink, maintenance liquid, waste ink, or other solutions used with the machine. Leaking ink may adhere to the skin or get into the eyes or mouth.

- The ink in the ink pack cannot be used up completely. The ink pack is filled with slightly more ink than the indicated value. A small amount of ink remains when the indicated amount of ink has been consumed and Ink End is displayed.

Replacing Ink

- The cartridge weight does not need to be entered (☞ "Correcting the ink cartridge weight"(P. 118)) when replacing with a new ink pack.

Removing the Ink cartridge

1 **Remove the ink cartridge.**

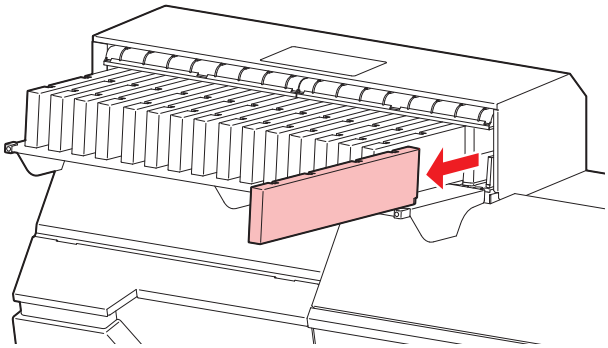

Replacing an ink pack

1 **Push in the tabs on the case to open the lid.**

2 **Remove the depleted ink pack.**

3 **Place a new ink pack inside the ink cartridge case.**

- Insert the connector on the ink pack firmly into the slot in the ink cartridge case with the side with double-sided tape affixed facing downward. Ink may not be supplied if the connector is not correctly aligned.

- Insert the pack without removing the "Regulation Booklet" attached to it.

4 Adjust the shape of the ink pack.

5 Peel off the backing paper from the double-sided tape.

6 Secure the ink pack in place so that it does not sag.

Good example	Bad example	
		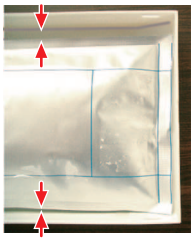
Ink pack correctly aligned with case corners	Ink pack not aligned with case corners	Ink pack offset

7 Replace the ink IC chip with a new one.

- Slide the ink IC chip out sideways to remove.

Good example	Bad example	
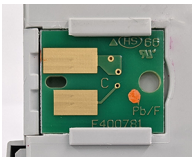	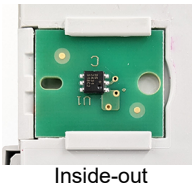	
	Inside-out	Back-to-front

- The marking on the ink IC chip indicates the color information.

Ink Color	Marking
Cyan	(One blue circle)
Magenta	(One red circle)
Yellow	(One yellow circle)
Black	(One black circle)
Sky blue	(Two blue circles)
Pale pink	(Two red circles)

Ink Color	Marking
White	◯ (One white circle)

- Insert the ink IC chip contained in the ink package. The ink IC chip stores information such as the ink color, remaining amount, and expiration date. Printing is not possible if a wrong IC chip is inserted.

8 Close the case lid.

- Push in until the tabs click.

- Be careful to avoid catching your hands or fingers.

9 Slowly shake the ink cartridge left and right.

- Note that the amount of shaking required varies according to the ink type. ☞ "Ink Maintenance"(P. 92)
- Shake from left to right to ensure that the ink flows.

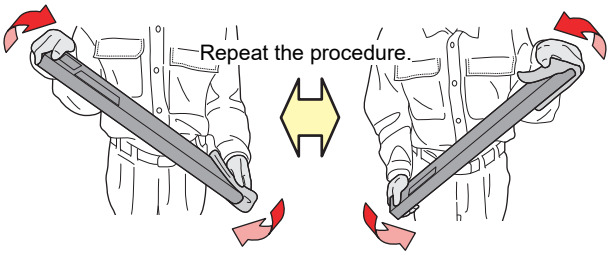

- When using an ink cartridge with ink remaining, hold a paper towel over the ink cartridge opening and gap at the side, then shake slowly with the ink cartridge tilted upright.

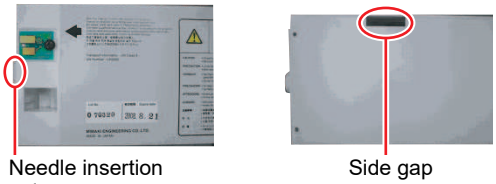

Loading the Ink cartridge

Check the ink slot numbers, then insert the correct color Ink cartridge.

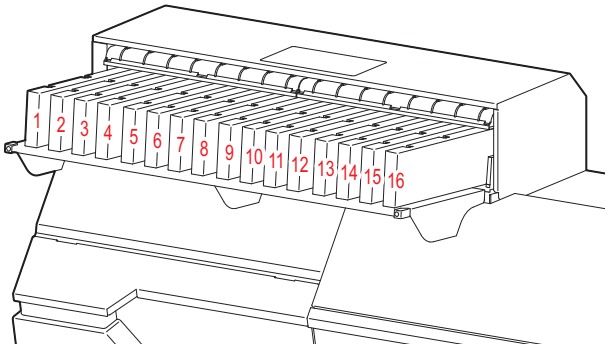

Ink set	Ink positions															
	1	2	3	4	5	6	7	8	9	10	11	12	13	14	15	16
4-color + W (C, M, Y, K, W)	K	K	C	C	M	M	Y	Y	W	W	W	W	W	W	W	W
6-color + W (C, M, Y, K, SB, PP, W)	K	C	SB	PP	M	M	Y	Y	W	W	W	W	W	W	W	W

1 **Insert the ink cartridges.**

- Insert with the ink IC chip facing to the left.

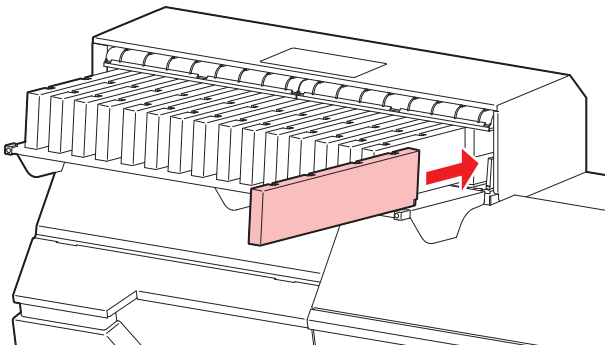

- Fully push in the eco-case. Otherwise, ink may not be fed properly.

- Do not touch the metal parts of the ink IC chip. Static electricity may damage the ink IC chip, and dirt or damage may cause the ink IC chip read error.

Chapter 2 Printing

This chapter

This chapter describes printing procedures and settings.

Print Process 48
Adjusting Print Head Height 51
Performing Maintenance Before Printing 53
Loading the Media 54
Media 54
About the Feed-Out Unit 55
Loading the Roll Media 57
Setting the Heater Temperature 62
Test Printing 63
Changing the Layout Direction for Test Printing 63
Ejection Failures..... 64
Head Cleaning.....65
Auto-correction 66
Auto-correction procedure 66
Feed Correction.....67
Feed Correction Procedure.....67
Correcting the Drop Position 68
Drop Position Correction Procedure 68
Preparing RIP data 70
Printing 72
Changing the origin.....72
Starting Printing 72
Stopping Printing (Data Clear) 73
Cutting the media 74

2.1 Print Process

1. Turn on the power.

☞ "Turning On the Power"(P. 32)

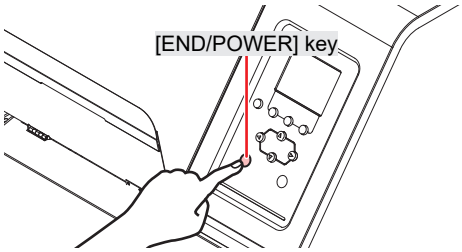

2. Connect a RIP PC to the machine.

☞ "Using a USB Cable"(P. 35)
☞ "Using a LAN Cable"(P. 34)

3. Setting Up RIP Software

☞ "Installing RIP Software"(P. 38) (required first time only)
☞ "Obtaining Color Profiles"(P. 38)
☞ "Setting Up RIP Software"(P. 38) (required first time only)

4. Adjusting Print Head Height

Adjust the height adjustment lever to suit the media. ☞ "Adjusting Print Head Height"(P. 51)

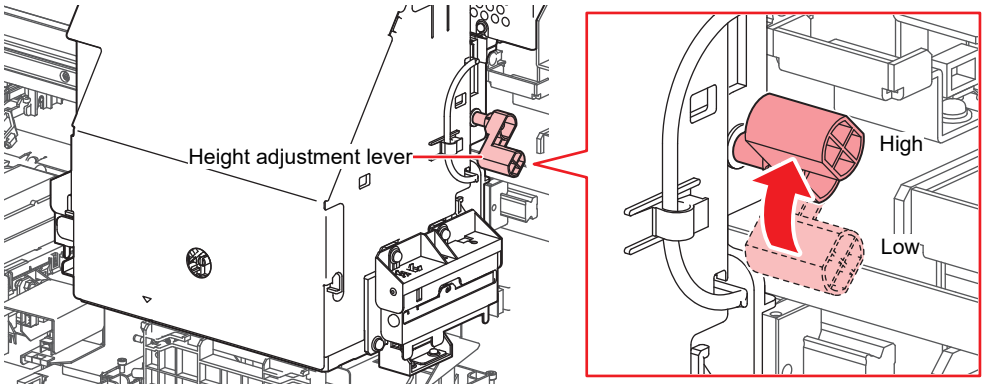

5. Performing Maintenance Before Printing

☞ "Performing Maintenance Before Printing"(P. 53)

6. Loading the Media

This machine can be used with roll media. ☞ "Loading the Media"(P. 54)

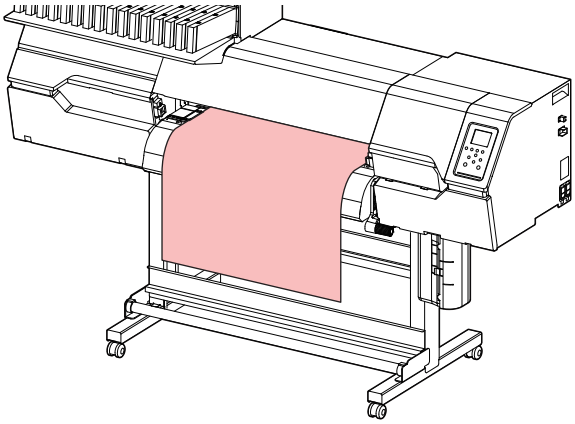

7. Setting the Heater Temperature

☞ "Setting the Heater Temperature"(P. 62)

8. Check the state of the print head nozzles.

☞ "Test Printing"(P. 63)

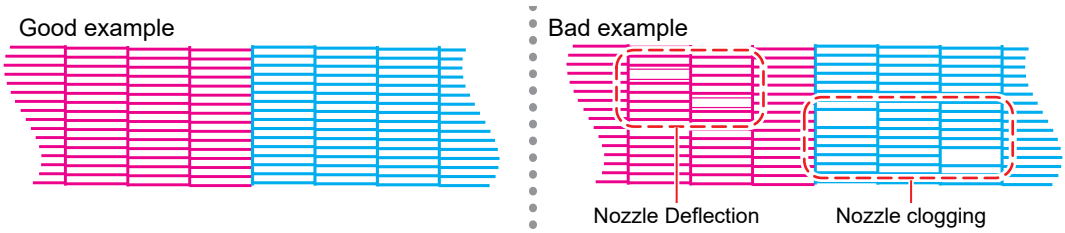

9. Clean the head to clear malfunctioning nozzles.

There are three different head cleaning methods. Choose the head cleaning method based on test print results. ☞ "Head Cleaning"(P. 65)

10. Adjust the media feed amount.

☞ "Feed Correction"(P. 67)

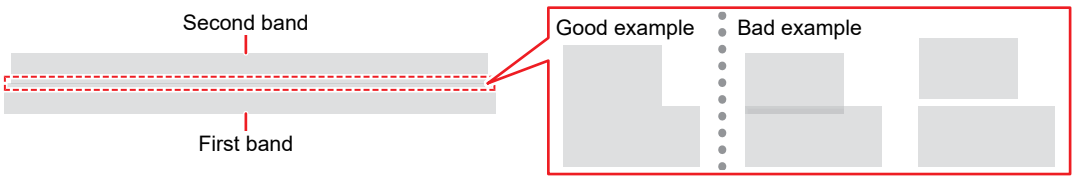

11. Adjust the drop position for bi-directional printing.

☞ "Correcting the Drop Position"(P. 68)

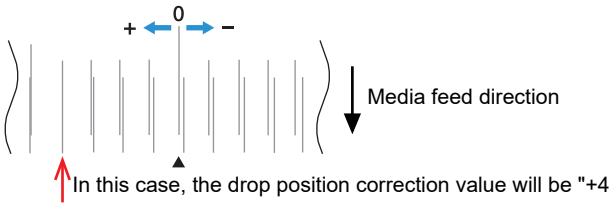

12. Printing RIP data

☞ "Printing"(P. 72)

13. Cutting the media

☞ "Cutting the media"(P. 74)

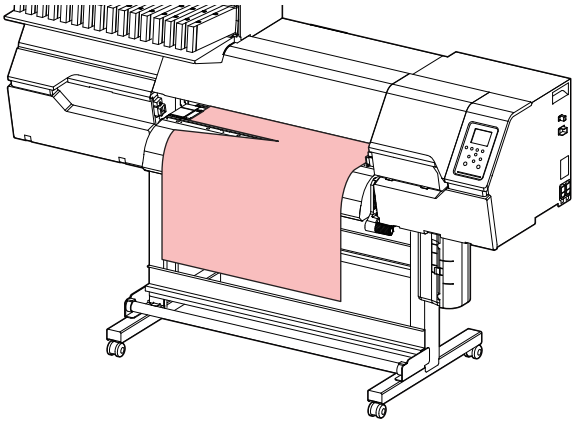

2.2 Adjusting Print Head Height

Adjust the height of the print head according to the thickness of the media you are using.

Range	Gap between print head and platen
Low	1.6 mm (default setting)
Middle	2.1 mm
High	2.6 mm

- Be sure to correct the dot position after altering the print head height. ☞ "Correcting the Drop Position"(P. 68)

Important!

- With inkjet printers, if the gap between the print head and media increases, the ink droplets tend to vaporize before they reach the media. Vaporized ink may adhere to the print head nozzle surface and media, affecting print quality and causing failure of the print head. Adjust the print head height to suit the media.

1 **On the LOCAL mode screen, select [MENU] > [Maintenance], then press the [ENTER] key.**

- The Maintenance menu is displayed.

2 **Select [Station Maint.] > [Carriage Out] > [Move To Platen Right End], then press the [ENTER] key.**

- The carriage moves over the platen.

3 **Open the front cover.**

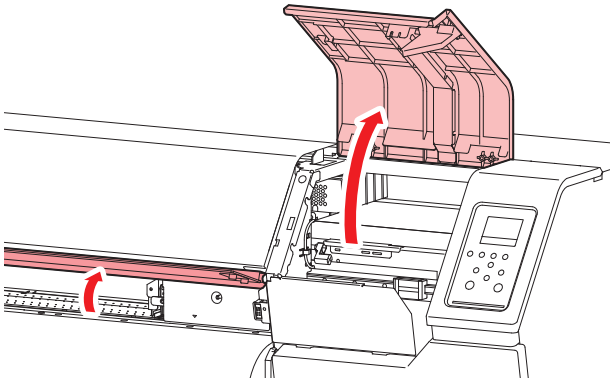

4 **Turn the knob inside the hole in the center of the carriage cover one or two times counterclockwise to loosen it.**

- Use a coin or screwdriver to turn it. There is a risk of injury if you try to turn it with your bare hands.
- Do not turn it more than two turns. Doing so may cause the screw to drop out, possibly affecting print quality.

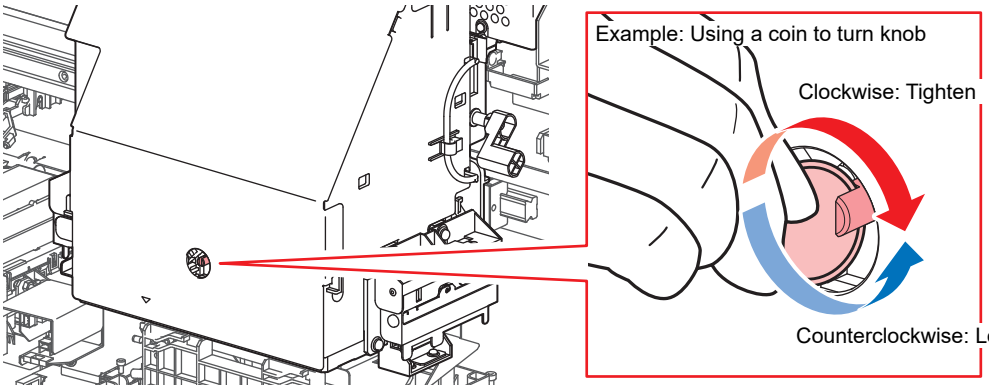

5 **Use the height adjustment lever to adjust the height.**

- Set the height adjustment lever so that the desired height is at the top. If the lever is not set to the correct position, problems such as media jamming and misting may occur, resulting in impaired print quality.

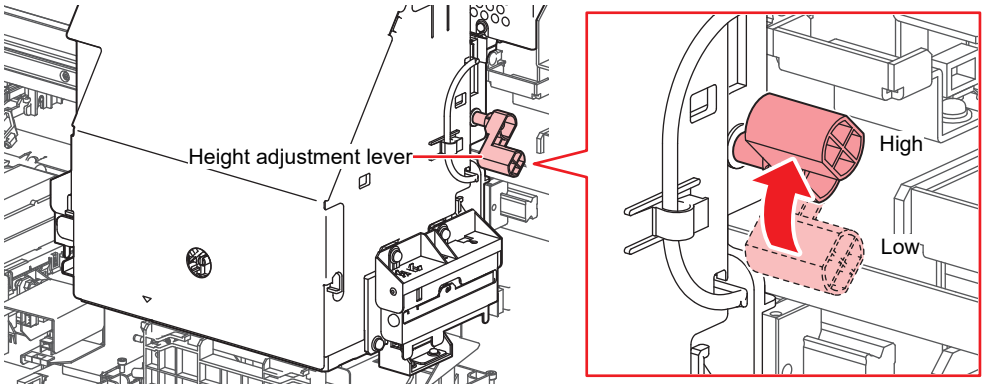

6 **Turn the knob clockwise by the same number of turns (one to two turns) to tighten, in the reverse of the procedure to loosen in step 4.**

7 **Once adjustment is complete, close the cover, then press the [ENTER] key.**

2.3 Performing Maintenance Before Printing

Perform the following maintenance before printing (before starting the day's work).

Maintenance will ensure that the nozzles function consistently.

Timing	Item
Before starting the day's work	Clean the wiper and wiper bracket. ☞ "Wiper Cleaning"(P. 93) 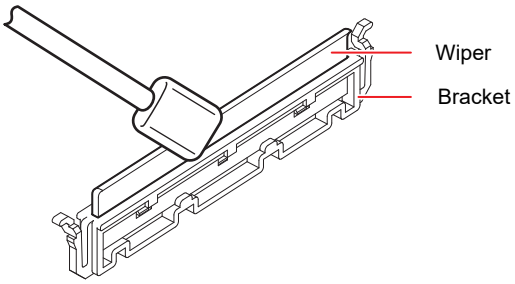
	Clean the cap rubber. ☞ "Cap Rubber Cleaning"(P. 95) 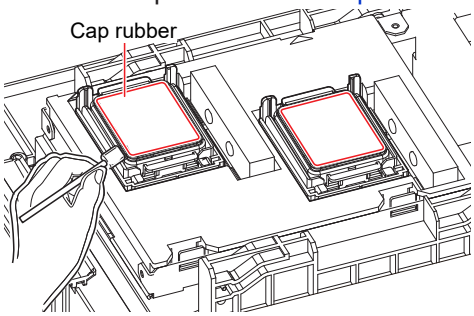
	Clean the underside of the carriage. ☞ "Carriage Underside Cleaning"(P. 97) Clean the print head sides and all around the nozzle plate using a cleaning stick. 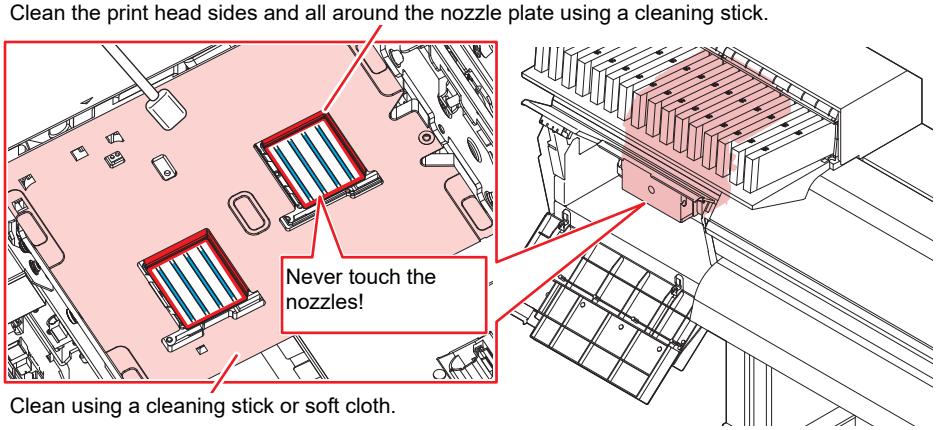

2.4 Loading the Media

- Adjust the head height before loading media. Moving the carriage after the media has been loaded may result in the print head coming into contact with the media and being damaged.

Media

Media handling precautions

- Use Mimaki-approved media to ensure consistent high-quality printing.

WARNING

- Assign at least two people to load roll media. Otherwise there is a risk of back injury due to the weight of the media.

NOTICE

- Protect media from dust when stored. Otherwise print quality may be reduced.
- When storing standard-size media rolled up, store with the coated surface facing out.

- Do not leave media loaded in the machine. This may cause dust to collect on media. Also, do not use media after wiping off dust. The static electricity generated by wiping may impair print quality.
- Do not use media immediately after removing from the packaging. The media may expand or shrink depending on the ambient temperature and humidity at the storage location. Allow to sit for at least 30 minutes in the same room conditions as this machine before loading.
- Do not use curled media. Doing so may result in damage to the print head and impaired print quality.

Important!

- The underside of the media may become soiled depending on how the printed media has been stored and the media type. Perform a test beforehand to check that the media does not transfer ink to the underside of the adjacent media.

About the Feed-Out Unit

You can use the feeding unit switch to change the media feed direction and torque limiter settings.

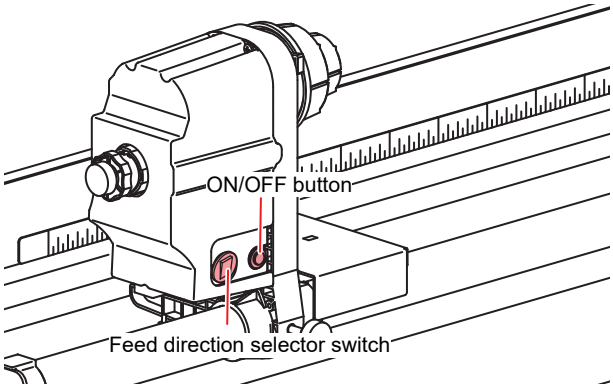

Name	Overview	
Direction selector switch	Up	When the torque limiter is on: To apply tension to media printed on the outer surface
	Down	When the torque limiter is on: To apply tension to media printed on the inner surface
ON/OFF button	Activates/deactivates feeding.	
Feed Unit ON/ OFF Setting (Machine Setting)	• When the feeding unit is on = Used with torque limiter on – A mode in which the media on the feed side is slackened during printing to improve feed accuracy. – A mode in which the media is periodically fed backward during printing to correct skew. • When the feeding unit is off = Used with torque limiter off – Does not allow the media on the feed side to slacken during printing. – The media is not fed backward during printing.	

How to Check the Feed Unit Settings from the Operating Panel
- [Menu] > [Function Setting] > [Feeding Unit]

Important!
- Turning the feed unit ON or OFF results in a trade-off between image quality and print speed. The settings should be selected according to requirements, for example, select on when prioritizing image quality, or off when prioritizing printing speed.

Feeding unit	Image quality	Speed
ON	Highest	Average
OFF	Good	Good

Adjusting the torque limiter

Turning the torque limiter on/off

Loosen the screw on the end (one or two turns), then pull to turn off the torque limiter.

Retightening the screw turns on the torque limiter.

- Hold the adjustment nut while rotating the screw to prevent any parts other than the screw from rotating.

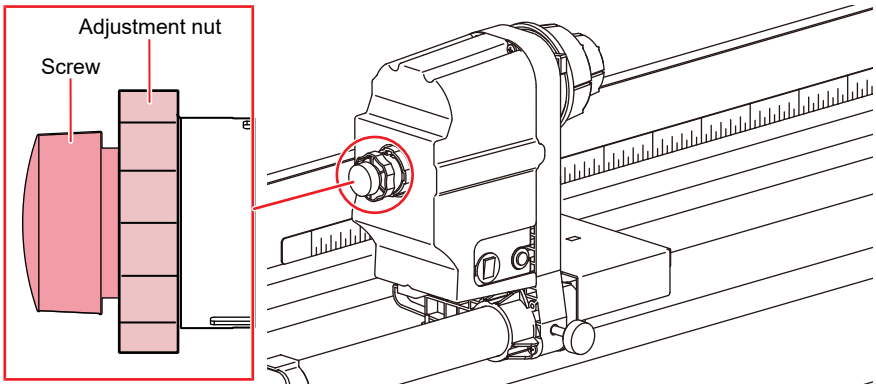

Torque limiter adjustment

Important!

- Make sure that the torque limiter is turned on before changing torque settings.

The adjustment nut can be rotated to adjust the take-up tension for backward feeding.

The torque should be set to "Mid" when using with this machine.

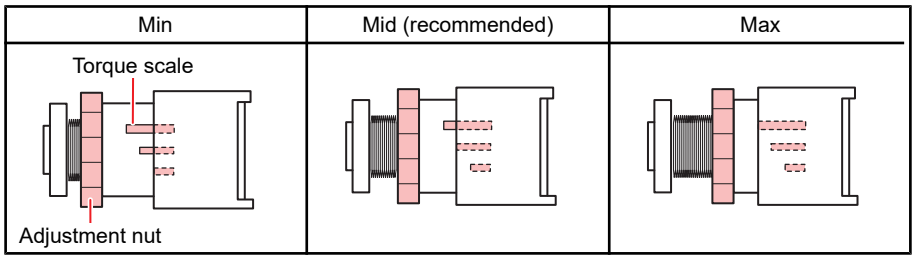

- If the media becomes skewed during printing, increase the torque setting in increments of half a turn (180 degrees) until you find a setting that prevents media skewing, and then use the printer with that setting.

Loading the Roll Media

1 **Raise the clamp lever.**

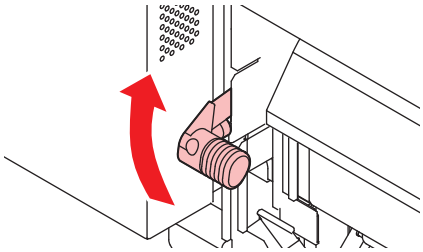

2 **Move the rear left roll holder to the roll setting position.**

- Loosen the retaining screw on the roll holder, then move the roll holder so that the center of the tapered part is positioned at approximately half the width [cm] of the media to be used.

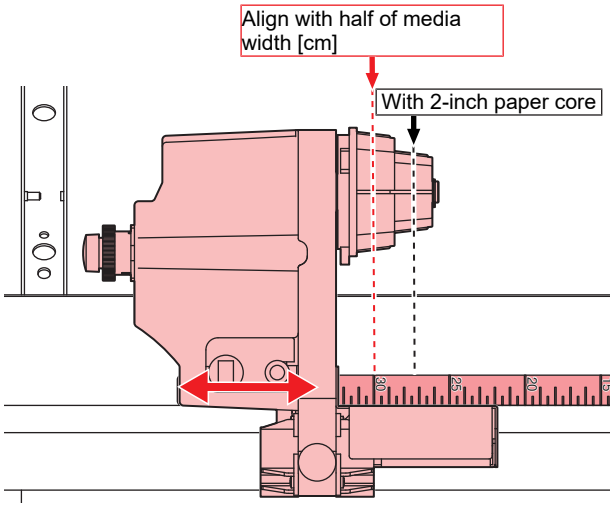

- Here, the media position only needs to be aligned approximately. Fine adjustment will be performed later.

3 **Tighten the retaining screw on the rear left roll holder.**

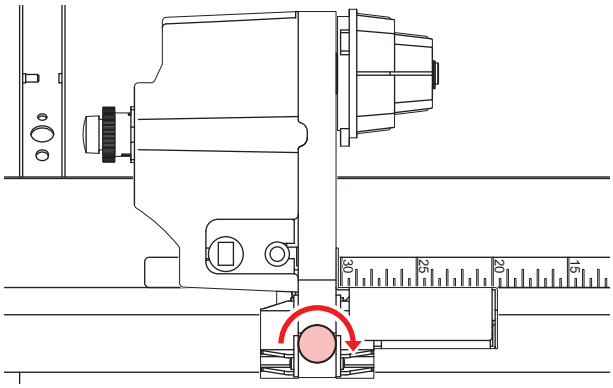

4 **Insert the paper core of the roll media on to the rear left roll holder.**

- Push the roll media fully onto the roll holder until it is held securely.

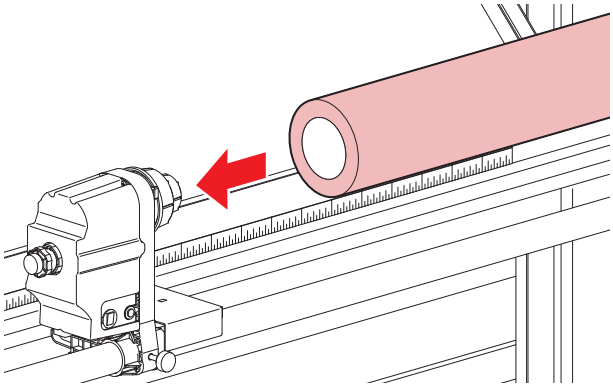

5 **Insert the rear right roll holder into the paper core.**

- Unscrew the roll holder retaining screw before moving.

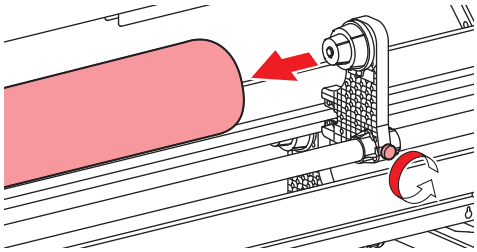

6 **Fine-adjust the media position.**

- Move the left and right edges of the media to positions corresponding to the value equal to half of the media width [cm].

- There is a risk of the media falling if it is moved in one go. Be sure to move it **gradually (ideally 1 cm at a time)**. Image quality will be affected if the media is dropped and the print surface becomes scratched.

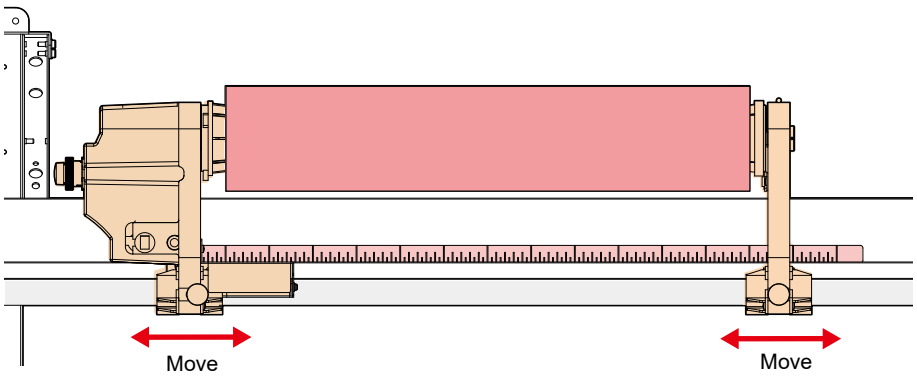

- For 600 mm-wide media, align both edges with "30" on the scale.

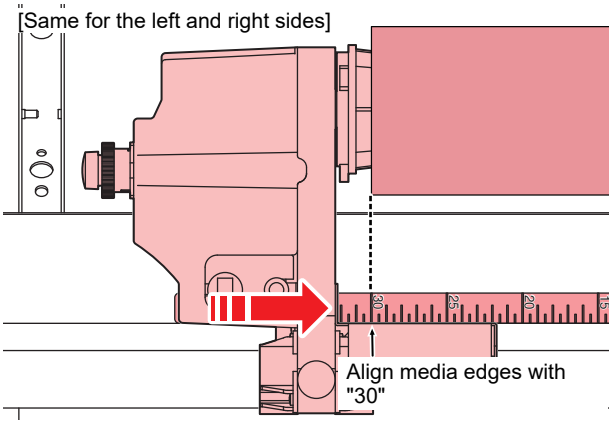

7 **Tighten the retaining screws on the roll holders at both ends.**

- Tighten one end first, then tighten the other retaining screw while pressing against it.

8 **Insert the media.**

- Insert into the gap between the pinch rollers and the grit rollers.

- Inserting the media at an angle allows smooth insertion without catching or sticking.

9 **Lower the clamp lever.**

- Hold the media with the pinch roller and grit rollers.

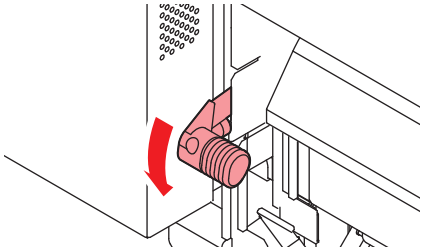

10 **Move to the front of the machine and open the front cover.**

11 **Raise the clamp lever and pull out the media.**

- Make sure the media does not fall to the rear.

- Adjust the rear roll holder position so that the media does not cover the right-hand slit line on the platen. Movement at an angle may result in damage to the print head.

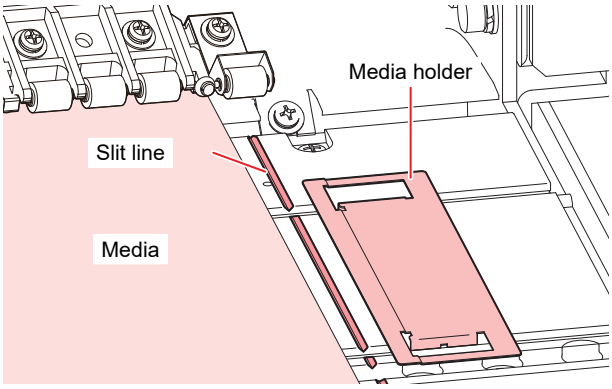

- The areas extending 5 mm from both sides of the media are margins.

12 **Pull the media out straight (to a distance of approximately 10 to 20 cm in front of the platen), then lower the clamp lever.**

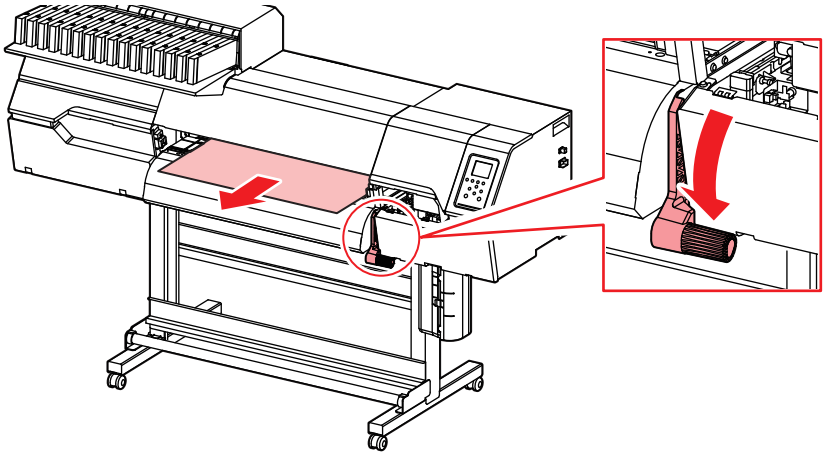

- If the media is loaded with slack left at the rear, this will cause skewing. Be sure to lower the clamp lever while pulling the media to tension it at the rear.
- Check to confirm that the media is tensioned evenly on the left and right sides at the rear. Note that this is the print surface, so take care not to allow contact with hard objects, sharp objects, or moisture or oil.
  * If the tension is uneven on the left and right sides, the media may have been loaded at an angle. Reload the media so that the tension is even on the left and right sides.

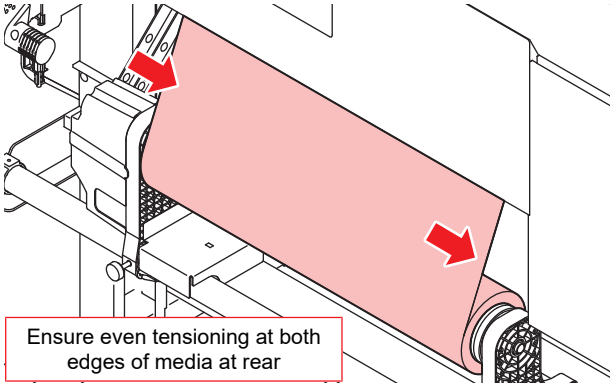

13 **Secure the media in the media holder.**

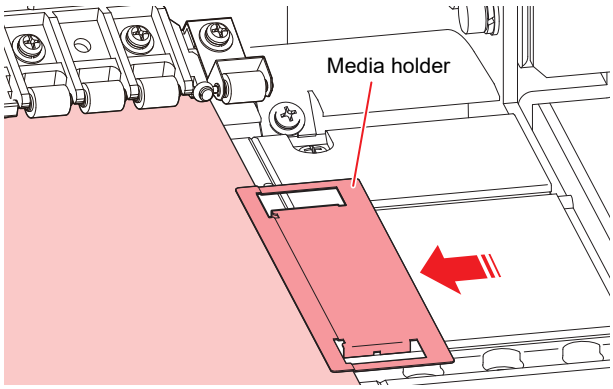

- Do not use the media holder when printing on thicker media.

14 Press ◀ and select "Roll".

- This starts media width detection.
- If [Machine Setup] > [Media Detect] > [Detection Type] is set to "MANUAL", the print area is specified manually.
- A screen is displayed for entering the media length if [Machine Setup] > [Media Detect] > [Media Remain] is set to "ON".

- A notification reading "Media Set Position R" will appear after media width detection if the media is too far to the right of the specified position. Reload media in the specified position.

2.5 Setting the Heater Temperature

Set the heater temperature to suit the type of media used. The temperature can be altered while printing is in progress, but this may cause color variations to occur.

- The temperature setting in the RIP software takes precedence. If you are using the Mimaki RIP software (RasterLink), the recommended values are stored in the color profile.

- Adjust the heater temperature to suit the media type and characteristics. Depending on the type, the media may expand or shrink or become rippled.

1 **On the LOCAL mode screen, select [HEATER].**

- The Heater Temperature Setup screen appears.

2 **Enter the heater temperatures, then press the [ENTER] key.**

- Printing is possible once the heater temperatures reach the temperature settings ±3 °C.

Name	Overview
PRE (Preheater)	Preheats the media before printing to suppress rapid temperature change.
PRINT (Print heater)	Helps prevent ink bleeding.
POST (Post-heater)	Allows ink to dry after printing.

2.6 Test Printing

Print a test pattern to confirm that the ink prints correctly. Perform head cleaning if you observe any ejection failures (e.g., nozzle clogging or deflection). ☞ "Head Cleaning"(P. 65)

Check beforehand
• Was the print head adjusted? ☞ "Adjusting Print Head Height"(P. 51) • Is media loaded? ☞ "Loading the Media"(P. 54)

- Load media at least 500 mm wide. You cannot print the entire pattern if media less than 500 mm wide is used.
- The NCU may not operate correctly if it is dirty. ☞ "NCU Cleaning"(P. 96)

- Select [Maintenance] > [Nozzle Recovery] > [Test Print], then select "ON" to perform nozzle recovery and test printing.
  Registration is required to perform nozzle recovery. ☞ "Registering Nozzle Recovery"(P. 81)

Changing the Layout Direction for Test Printing

You can change the layout direction for test printing.

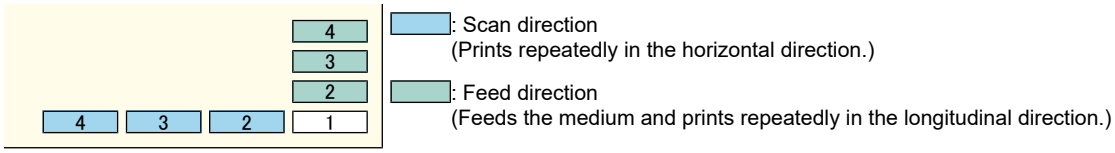

1 **On the LOCAL mode screen, select [TEST PRINT/CLEANING] > [Test Print], then press the [ENTER] key.**

- The Test Print menu is displayed.

2 **Select [Scan Dir.] or [Feed Dir.], then press the [ENTER] key.**

- Test printing starts.

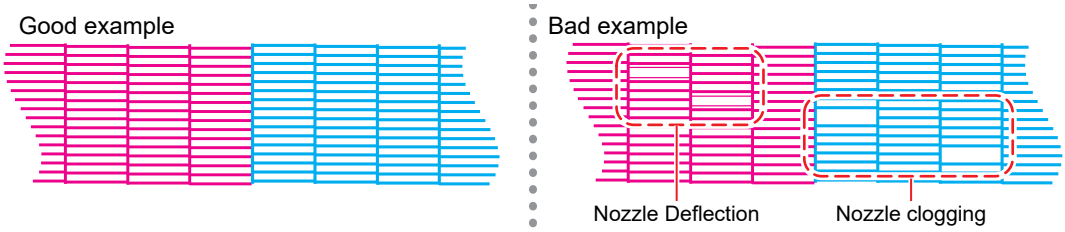

3 **Check the print results.**

Ejection Failures

Typical examples of ejection failures (e.g., nozzle clogging, deflection) are as shown below. In order to prevent printing in such a state, check whether the ink has been properly ejected regularly before printing.

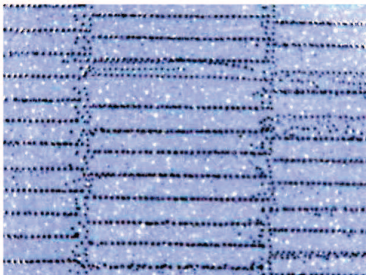

Nozzle Deflection

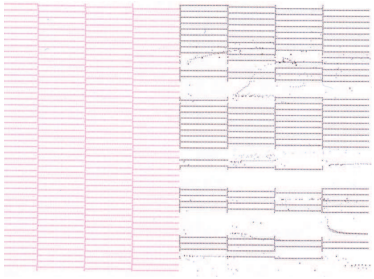

Nozzle clogging

Ink drips

Mist

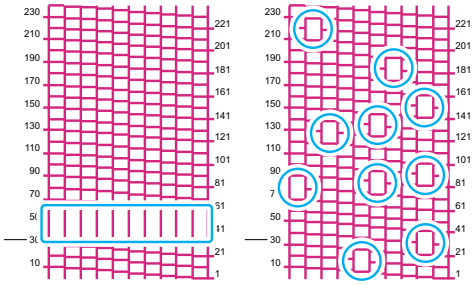

Mixed air

2.7 Head Cleaning

The following head cleaning methods are available. Choose the method based on test results.

Item	Details
Soft	If the print shows bent lines (nozzle deflection)
Normal	If the print shows missing lines (nozzle clogging)
Hard	If soft cleaning and normal cleaning fail to resolve ejection failures (e.g., nozzle clogging or deflection).
White Recovery Normal	When the white nozzle does not recover even after executing a hard cleaning
White Recovery Hard	When the white nozzle does not recover even after executing the "White Recovery (Normal)" cycle

- Cleaning is not possible when [Ink Level Low], [Ink Near End], [Ink Level End], or [Ink End] is displayed. There may be enough ink left for cleaning, so correct the weight of the ink cartridge.
  ☞ "Correcting the ink cartridge weight"(P. 118)
  If a warning is displayed even after correcting the weight, replace with a new ink pack. ☞ "Replacing Ink"(P. 43)

1 **On the LOCAL mode screen, select [TEST PRINT/CLEANING] > [Cleaning], then press the [ENTER] key.**

- The Cleaning menu is displayed.

2 **Select the cleaning type, then press the [ENTER] key.**

3 **Select the Head to clean, then press the [ENTER] key.**

- Check the check box. Heads with checked check boxes will be cleaned.

4 **Run another test print and check the print results.**

- Repeat the cleaning and test printing process until the print results appear normal.

- Do the following if head cleaning fails to resolve ejection failures such as nozzle clogging or deflection.
  ☞ "Wiper Cleaning"(P. 93)
  ☞ "Cap Rubber Cleaning"(P. 95)
  ☞ "Print Head Nozzle Washing"(P. 122)

2.8 Auto-correction

The auto-correction function (DAS: Dot Adjustment System) detects a correction pattern with the sensor and automatically corrects the drop position.

Check beforehand
• Is media loaded? ☞ "Loading the Media"(P. 54) • For roll media, is the rear roll media free of sagging? ☞ "Loading the Roll Media"(P. 57)

Important! • Please use media with a width of 250 mm or more.

Auto-correction procedure

Print a correction pattern, then enter the correction value. The value corrected here will also be updated on the setup menu.

1 **On the LOCAL mode screen, select [ADJUST].**

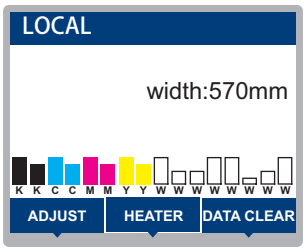

2 **Select [Auto-correction], then press the [ENTER] key.**

3 **Select one of the following two settings, then press the [ENTER] key.**

- [Feed Comp.]: Performs feed correction automatically.
- [Drop.PosCorrect]: Performs dot position correction automatically.

- Dot position correction allows the resolution to be selected from 600Hi, 900Hi, and 1200Hi.
- The pattern is automatically printed, detected, then corrected.
- The auto-correction menu displayed and actual correction performed will be the same as those in the media settings.

2.9 Feed Correction

Changing the media type or feeding unit settings will alter the media feed rate. This should be corrected as necessary if the media or feeding unit settings have been changed. Image defects (e.g., dark or light streaks) will result if the feed is not properly corrected.

Check beforehand
• Is media loaded? ☞ "Loading the Media"(P. 54) • For roll media, is the rear roll media free of sagging? ☞ "Loading the Roll Media"(P. 57)

Feed Correction Procedure

Print a correction pattern, then enter the correction value. The value corrected here will also be updated on the setup menu.

1 **On the LOCAL mode screen, select [ADJUST].**

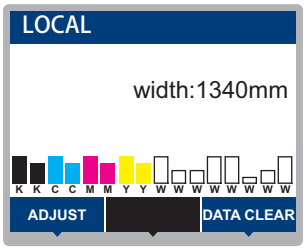

2 **Select [Feed Comp.], then press the [ENTER] key.**

- Correction pattern printing starts.

3 **Check the print results.**

- A correction value input screen appears.
- Adjust the bands so that the region between them is evenly colored.

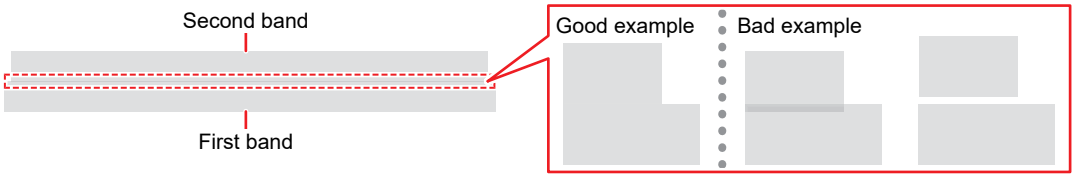

4 **Enter the correction value, then press the [ENTER] key.**

- "+" input: Increases the separation between bands.
- "-" input: Reduces the separation between bands.
- Increment the correction value by "30" to move the bands by approximately 0.1 mm.

Correcting the Media Feed During Printing

You can also correct the media feed amount in REMOTE mode or while printing.

1 **Press [ADJUST] in REMOTE mode or while printing.**

2 **Enter the correction value, then press the [ENTER] key.**

- Correction value: -9999 to 9999
- The value entered here will be updated immediately.

2.10 Correcting the Drop Position

Changing the media and print head height will also alter the drop positions. Correct the drop position to suit the type of media used. Image defects (e.g., overlaid lines or blurred images) will result if the drop position is not properly corrected.

Check beforehand
• Was the print head adjusted? ☞ "Adjusting Print Head Height"(P. 51) • Is media loaded? ☞ "Loading the Media"(P. 54)

- Load media at least 500 mm wide. You cannot print the entire pattern if media less than 500 mm wide is used.
- The NCU may not operate correctly if it is dirty. ☞ "NCU Cleaning"(P. 96)

Drop Position Correction Procedure

Print a correction pattern, then enter the correction value. The value corrected here will also be updated on the setup menu.

1 On the LOCAL mode screen, select [ADJUST].

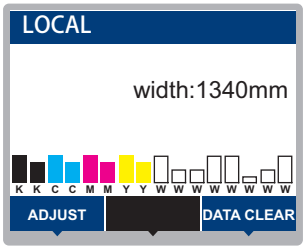

2 Select [Drop.PosCorrect], then press the [ENTER] key.

3 Select the resolution, then press the [ENTER] key.

- Select the resolution to be adjusted. When "All" is selected, correction patterns for all resolutions will be printed. ☞ "Media Setting Menu"(P. 76)

- The indicated resolutions are those in the scan direction.

4 Check the print results.

- A correction value input screen appears.
- Enter the position where the two upper and lower lines coincide.

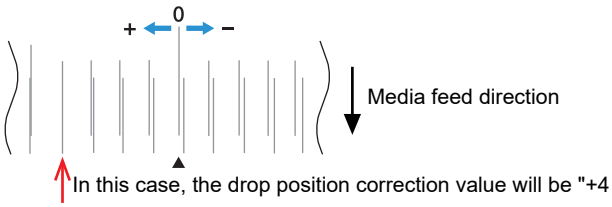

5 Enter the correction value, then press the [ENTER] key.

- Correction value: -40 to 40

- If the lines do not coincide when the correction value is within the range -40 to 40, the print head height may have been improperly adjusted. Adjust the print head height.
☞ "Adjusting Print Head Height"(P. 51)

6 **Enter the correction value in the same way for pattern 2 and subsequent patterns.**

2.11 Preparing RIP data

The explanation here applies to MIMAKI RIP software (RasterLink).

- Prepare suitable image data for printing.

1 Launch RasterLink.

- Click the icon on the PC desktop.

2 Select the image data to print.

(1) Select [File] > [Open].

(2) Select the desired image data, then click [Open].

- If multiple printers are registered, select TxF330-800 in "Printer Name".

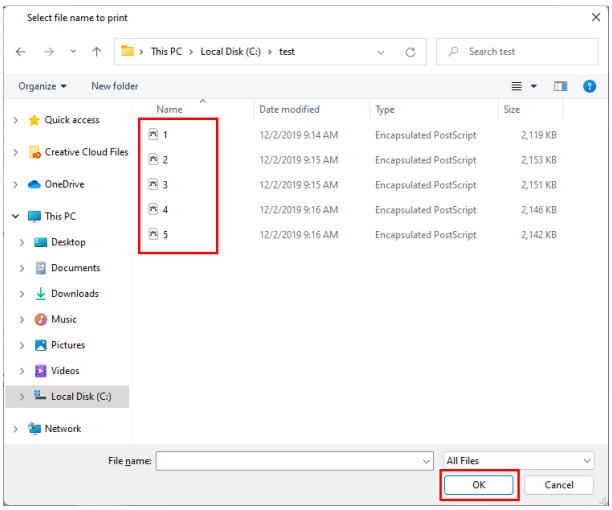

3 Select the image data imported.

- The image is displayed in the tab for TxF330-800 selected in "Printer name".

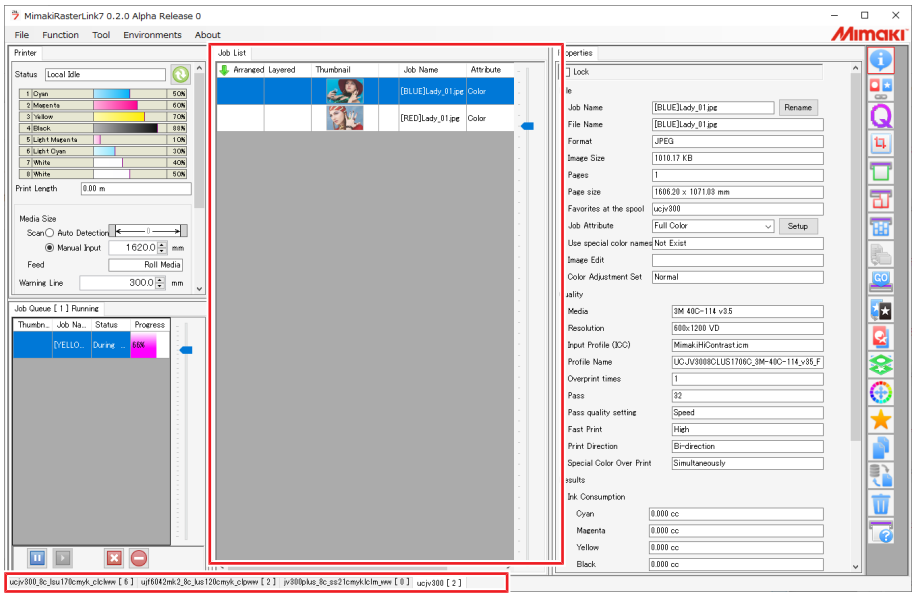

4 Check and adjust the settings as needed.

- Specify the following settings by clicking the function icons shown on the right-hand side of the screen:

  (Normal printing): Specifies settings such as enlargement/reduction and number of copies.

  (Quality): Selects a color profile for the media and ink set loaded in this machine.

- For more information, refer to the RasterLink reference guide. https://mimaki.com/download/software.html

5 Print image data.

- Click (Execute) from the function icons at the right of the screen. Select "RIP and Print" or "Immediate Print", then click [Start].

- Media width must be reacquired after replacing media.
  (1) Select the tab for TxF330-800 in the main window.
  (2) Click (Update the printer status) in the Printer tab.

2.12 Printing

Check beforehand
• Was the print head adjusted? ☞ "Adjusting Print Head Height"(P. 51) • Is media loaded? ☞ "Loading the Media"(P. 54) • For roll media, is the rear roll media free of sagging? ☞ "Loading the Roll Media"(P. 57)

Changing the origin

The print start position can be altered. Use the LED pointer to set the origin.

- Print origin default value
  - Feed (longitudinal, X') direction: Approx. 75 mm to rear from platen cutting slot
  - Scan (lateral, Y') direction: 15 mm from right edge of media

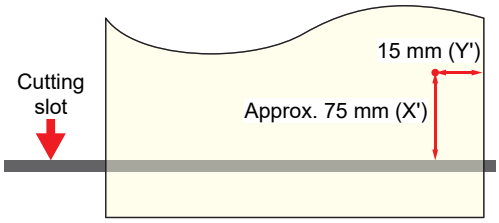

1 **On the LOCAL mode screen, press ▲▼◀▶.**

- The Origin Setup screen appears.

2 **Press ▲▼◀▶ to move the origin to the desired position.**

- The carriage moves left and right and feeds the medium.

3 **Press the [ENTER] key.**

- The origin is updated.

Starting Printing

1 **Send the RIP data from the PC.**

- ☞ "Preparing RIP data"(P. 70)

- If an error message appears, check the appropriate action by referring to the error number. Error messages

2 **Start printing.**

- Printing starts once RIP data is received.

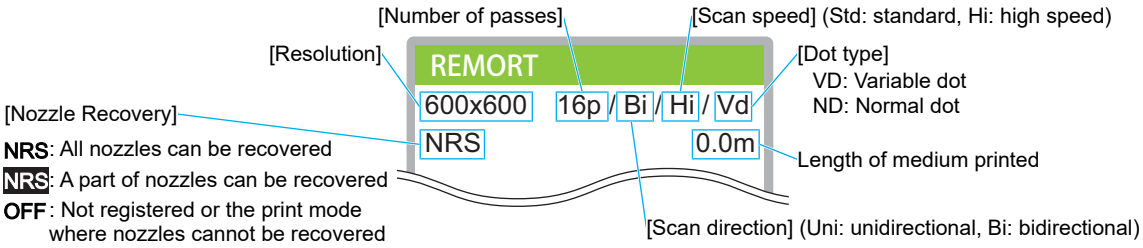

- Print speeds may differ for the same image data, depending on the width of the medium loaded, print origin position, and resolution.
- If an error occurs, the machine switches to LOCAL mode once printing is completed. Further printing is not possible.

Pausing Printing

1 Press [LOCAL] while printing is in progress.

- Printing is paused.
- If data is being sent from a PC, data transmission is paused at the PC.

2 Press [REMOTE].

- Printing resumes.

- No other functions can be used when printing is paused.

Stopping Printing (Data Clear)

1 On the LOCAL mode screen, select [DATA CLEAR].

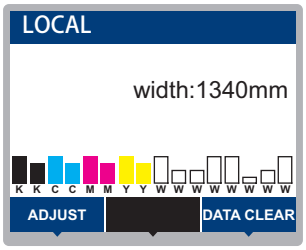

2 Press the [ENTER] key to clear the received data.

- The receive buffer is cleared.

2.13 Cutting the media

1 **On the LOCAL mode screen, press ▲▼◀▶.**

- The Origin Setup screen appears.

2 **Press ▲▼ to feed the media to the position required for cutting.**

3 **Select [CUT], then press the [ENTER] key.**

- The media is cut.

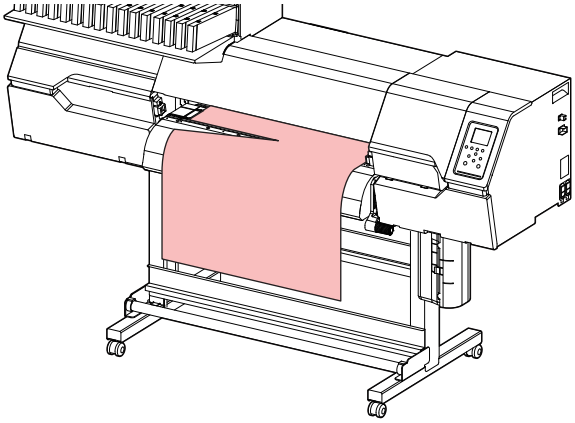

When the machine is not in use, raise the clamp lever to separate the pinch rollers from the grit rollers.

- Leaving the pinch rollers lowered may cause them to become deformed and prevent media from being fed correctly.
- Leaving media loaded will subject it to force from the pinch rollers, which may leave pinch roller marks on it.

- With thinner media or curled media, the media may catch in the groove on the platen after cutting. Be careful to avoid bending or dirtying the media when handling it.

Chapter 3 Setup

This chapter

This chapter describes the [MENU] functions.

Media Setting Menu 76

Maintenance Menu 79

Registering Nozzle Recovery..... 81

Nozzle Check 83

Function Setting Menu 84

Environment Setting Menu 86

Machine Status Menu.....88

3.1 Media Setting Menu

When you use the machine for the first time, the Select Use Media screen is displayed. Registering the Media The media Information and correction value can be saved in advance for specific media.

- To set print conditions for a single use, select "Temporary". The conditions set in "Temporary" are cleared when the machine is restarted.

The user can select to prioritize the settings on the machine or the settings on the PC. Setting individual menus to "Host" prioritizes PC settings. To prioritize settings for this machine, select a setting other than "Host".

- For more information on how to specify RIP software, refer to the RIP software operating manual.

Menu List

Item	Setting		Details
	*1	*2	
Feed Comp.	-9999 to 0 to 9999	-	Corrects the media feed amount. Print a pattern and enter the correction amount. ☞ "Feed Correction"(P. 67)
Drop.PosCorrect	-	-	Corrects the drop position for bi-directional printing. ☞ "Correcting the Drop Position"(P. 68)
(Resolution)	*	-	Select the resolution to be corrected. When "All" is selected, correction patterns will be printed for all resolutions. * The available resolutions vary according to the model.
(Correction Value)	-40.0 to 0 to 40.0	-	Check the pattern and enter correction values.
Auto-correction (FW ver. 1.2 or later)	-	-	The auto-correction function (DAS: Dot Adjustment System) detects a correction pattern with the sensor and automatically corrects the drop position. When "All" is selected, "Feed Comp." and "Drop.PosCorrect" are corrected. • Check to confirm that the media does not lift up. • Load white and clean media. • Media such as synthetic paper, tarpaulin, or cloth media may not be detected. • Do not send RIP data from the PC during pattern printing. • If automatic correction is unsuccessful, correct the position manually. [MENU] > [Media Setting] > [Feed Comp.] or [Drop.PosCorrect]
All	-		
Feed Comp.	-	-	
Drop.PosCorrect	-	-	
(Resolution)	*	-	Select the resolution to be corrected. When "All" is selected, correction patterns will be printed for all resolutions, and the drop position is corrected automatically. * The available resolutions vary according to the model.
MAPS*	-	-	MAPS: Mimaki Advanced Pass System This function disperses the boundaries between passes to make feed streaks between passes less visible. Altering MAPS may alter the color. This function may be less effective with certain types of images.

Item	Setting *1	Setting *2	Details
			* The MAPS version will vary according to the model.
MAPS*	AUTO/ MANUAL	-	This should normally be set to "AUTO". When set to "MANUAL", the following items are displayed:
Speed	50 to 100 %	-	Reducing speed will make streaks less visible. However, printing will be slower.
Smoothing Level (Color)	0 to 100 %	-	Increasing smoothing makes streaks less visible. Make separate settings for color and spot color (white).
Smoothing Level (Spot)			
Heater	-	-	Set the heater temperature.☞ "Setting the Heater Temperature"(P. 62)
PRE	OFF/20 to 50 °C	-	Preheats the media before printing to suppress rapid temperature change.
PRINT	OFF/20 to 50 °C	-	Helps prevent ink bleeding.
POST	OFF/20 to 50 °C	-	Allows ink to dry after printing.
OFF time	None / 0 to 90 min	-	Sets the time before turning the heater off after printing.
Media Information	-	-	Enter the media information.
Media Type	-	-	Select the media type to be used. The available media types vary depending on the model.
Media Width	-	-	Sets the media width detection method.
Detection Type	AUTO/ MANUAL		• AUTO: The media width is automatically detected with the sensor. • MANUAL: ◀ Press ▶ to set the media width manually. – When media width cannot be detected correctly, set the media width detection method to "MANUAL".
Media Remain	-	-	The remaining roll media amount can be displayed and printed out in REMOTE mode.
Media Remain Manage	ON/OFF	-	• ON: An input screen appears once the media width is detected. ▲ Press ▼ to set the media length. Press the [FUNC3] key on the "Origin Setup" screen to print the date and remaining media amount. • OFF: The remaining media amount is not displayed.
Length	0 to 500 m	-	Enter the roll media length.
Detail Setting	-	-	This is used to set various functions.
Vacuum Fan	Host/Weak/ Standard/ Strong	Strong	Sets the force with which the medium is held down. • This can be used to prevent media jamming and print head damage caused by the media lifting up.
Continuous Running	ON/OFF		• ON: The media is constantly held down under vacuum. • OFF: The media is held down by vacuum only when required, such as during printing and feeding.

Item		Setting		Details
		*1	*2	
	Feed Speed	Host/10 to 100 to 200 %	100	Sets the media feed speed. • Depending on print conditions, the speed may not vary for certain settings. • Setting to 100 % or more reduces the time required to complete printing but may affect print quality due to insufficient drying time.
Media Name Change		-	-	You can change the name of a setting type. The name can include alphanumeric characters or symbols.
Delete MediaInfo		-	-	Delete the set media information.

*1. The default settings are shown underlined.

*2. Settings applied if no settings can be made in the RIP software (host) or if this machine is prioritized.

3.2 Maintenance Menu

This menu is used for maintenance actions. It also lets the user perform nozzle recovery if nozzle clogging persists even after cleaning and nozzle washing.

Menu List

Item	Setting *1	Details
Station Maint.	-	This moves the carriage to allow station and print head maintenance.
Carriage Out	-	
Move To Platen Right End	-	Cleans around the station, including the cap, wiper, and NCU. ☞ "Cap Rubber Cleaning"(P. 95) ☞ "NCU Cleaning"(P. 96)
Move To Maint. Space	-	Cleans around the print head. ☞ "Carriage Underside Cleaning"(P. 97) ☞ "Media Sensor Cleaning"(P. 100) ☞ "Automatic Correction Sensor (DAS) Cleaning"(P. 98)
Nozzle Wash	1 to 99 min	Washes the print head nozzle surface with maintenance liquid to resolve ejection failures (e.g., nozzle clogging or deflection). ☞ "Print Head Nozzle Washing"(P. 122)
Pump Tube Cleaning	-	Washes the suction pump tube (below the cap). ☞ "Ink Discharge Channel Cleaning"(P. 99)
Custody Wash	1 to 99 min	Perform this step if the machine will not be used for extended periods. The function washes nozzles and drainage channels to maintain the machine in optimal condition. ☞ "When this Printer is Left Unused for a Long Time"(P. 104)
Wiper maintenance	-	Used for replacing the wiper and maintaining the washing tray.
Replace Wiper	-	Use this function when replacing the wiper. Replacing the wiper resets the machine wiper usage counter. ☞ "Wiper Replacement"(P. 106)
wash tray cleaning	-	Used to clean the washing tray. ☞ "Washing Tray Cleaning"(P. 102)
Wash tray filling	-	Used to add maintenance liquid to the washing tray.
Cap Replacement	-	Use this function when replacing the cap. Replacing the cap resets the cap usage time stored in the machine. ☞ "Cap Replacement"(P. 107)
Test Printing	-	Print a test pattern to confirm that the ink prints correctly. Perform head cleaning if you observe any ejection failures (e.g., nozzle clogging or deflection). ☞ "Test Printing"(P. 63)
Cleaning	-	Several head cleaning methods are available. Choose the head cleaning method based on test print results. ☞ "Head Cleaning"(P. 65)
Nozzle Recovery	-	Allows other nozzles to be used for printing if maintenance actions like nozzle washing fail to resolve ejection failures (e.g., nozzle clogging or deflection).
Print	-	Prints a pattern to check nozzle condition and register the nozzle. ☞ "Registering Nozzle Recovery"(P. 81)
Entry	-	Registers the nozzle without printing a pattern.
Reset	-	Initializes the details set.

Item	Setting*1	Details
Test Printing	ON/OFF	Sets whether to perform nozzle recovery before test printing.
Nozzle Check	-	☞ "Nozzle Check"(P. 83)
Printing Check	ON/OFF	Performs nozzle clogging detection before printing starts.
Check Interval	-	Sets the nozzle clogging detection timing.
Length	0.1 to 30.0 to 100.0 m	Performs nozzle clogging detection after the length set is reached and before the next print starts.
File	1 to 30 to 1,000 files	Performs nozzle clogging detection after the preset number of files has been printed and before the next print starts.
Continuation Print	Stop/ Continuous	Select whether to stop or continue printing if "Nozzle clogging" is detected.
Action	Off/1 to 10 to 100	Performs nozzle recovery (cleaning followed by nozzle checking) if "nozzle clogging" is detected.
Cleaning	Soft/Normal/ Hard	Sets the cleaning type.
Retry Count	0 to 3 times	Performs nozzle recovery (cleaning followed by nozzle checking) for the specified number of times.
Auto Nozzle Recovery	ON/OFF	Performs nozzle recovery automatically if "nozzle clogging" is detected. See below if you wish to perform nozzle recovery manually. ☞ "Registering Nozzle Recovery"(P. 81)
Judgment Condition*2	OFF / 1 to 64 nozzles	Set the number of nozzles to be detected as clogged before "nozzle clogging" is detected. Up to 16 nozzles per row can be set. The next print will not start if "nozzle clogging" is detected during continuous printing.
Auto Maint.	-	Sets various maintenance actions to be performed automatically. Set the interval between individual maintenance actions. • If the warning message "Replace Wasteinktank" appears, the automatic maintenance function is disabled. ☞ "Waste Ink Tank Replacement"(P. 115)
Refresh	0.5/1.0 h	Sets the refresh interval (when a small amount of ink is ejected from the print head nozzles).
Nozzle Wash	48 h/OFF/1 to 168 h	Sets the interval for head nozzle cleaning. If a standing time is set, the nozzle surface is soaked in maintenance liquid before cleaning. This prevents nozzle clogging.
Cleaning Interval	AUTO/ MANUAL	Sets print head cleaning intervals. This will help prevent nozzle clogging. • AUTO: Automatically sets the execution interval. • MANUAL: Manually set the execution interval.
Cleaning Interval	6 h/1 to 48 h	Set the interval to execute commands in MANUAL mode.
Type	Normal/Soft/ Hard	Sets the cleaning type for head cleaning.
Startup Cleaning		If the device has not been used (i.e., no printing has taken place) during the specified period, the NCU will execute nozzle checking when the power is turned on and automatically execute maintenance based on the nozzle condition.
Idle days	5d/OFF/1–10d	Set the period of non-use.

Item	Setting*1	Details
Print Maint.	-	Sets the maintenance to be performed automatically midway during printing.
Auto Cleaning	-	Sets the conditions to perform head cleaning after the preset number of files are printed.
Setup	File/Length/<u>Time</u>/OFF	Sets the conditions to perform head cleaning.
Interval	-	Sets head cleaning intervals.
(File)	1 to 1,000	Cleaning starts when the set number of files is exceeded.
(Length)	0.1 to 100.0 m	Cleaning starts when the set print length is exceeded.
(Time)	10 to 240 min	Cleaning starts when the set print time is exceeded.
Type	<u>Normal</u>/Soft/Hard	Sets the cleaning type for head cleaning.
Interval Wiping	<u>OFF</u>/3 to 255 min	Wiping starts when the set print time is exceeded.
Refresh	<u>Weak</u>/<u>Standard</u>/Strong	Select the refresh (flushing) time during printing.
Waste Ink Tank	-	Resets or corrects the waste ink tank usage count. ☞ "Waste Ink Tank Replacement"(P. 115)
Reset Waste Ink Volume	-	Resets the waste ink tank usage count. ☞ "Replacing the Waste Ink Tank"(P. 115)
Adjust Waste Ink Volume	-	Corrects the waste ink tank usage count. ☞ "When "Check Waste Ink Tank" message appears"(P. 115)
Tank Capacity	-	Displays the waste ink tank capacity.
Ink Remaining Corr.	-	Corrects the remaining ink count.
White Maintenance	Normal/Hard	Maintains the white ink nozzle condition by expelling white ink clogging and any air inside the ink paths. • Normal: Execute this procedure if white nozzle clogging persists. • Hard: Please execute this procedure if any abnormalities occur, such as pixel dropout or bleeding.

*1. The default settings are shown underlined.

Registering Nozzle Recovery

Allows other nozzles to be used for printing if maintenance actions like nozzle washing fail to resolve ejection failures (e.g., nozzle clogging or deflection).

- Nozzle recovery can be specified for up to 10 nozzles per row. The time taken for printing remains unchanged even when nozzle recovery is set.

- Load media at least 500 mm wide. You cannot print the entire pattern if media less than 500 mm wide is used.
- The NCU may not operate correctly if it is dirty. ☞ "NCU Cleaning"(P. 96)

1 Position the media.

2 **On the LOCAL mode screen, select [MENU] > [Maintenance], then press the [ENTER] key.**

- The Maintenance menu is displayed.

3 **Select [Nozzle Recovery] > [Print], then press the [ENTER] key.**

- Print a nozzle recovery pattern.
- The Select Entry Nozzle screen appears once printing is complete.

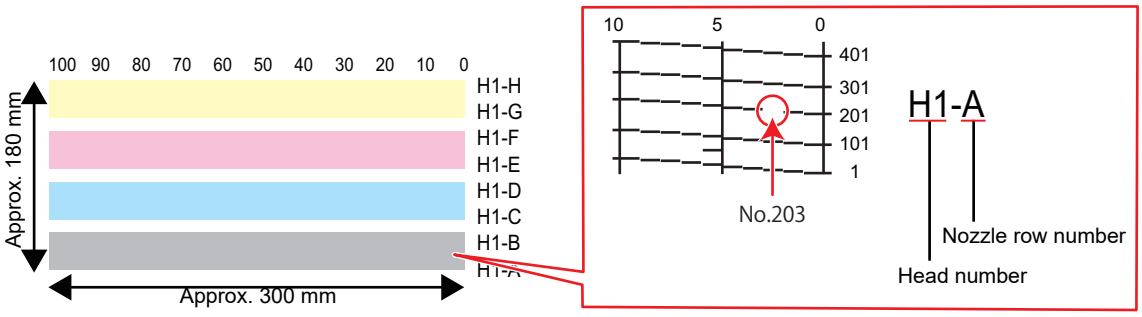

4 **Select the "head number and nozzle row" for nozzle recovery, then press the [ENTER] key.**

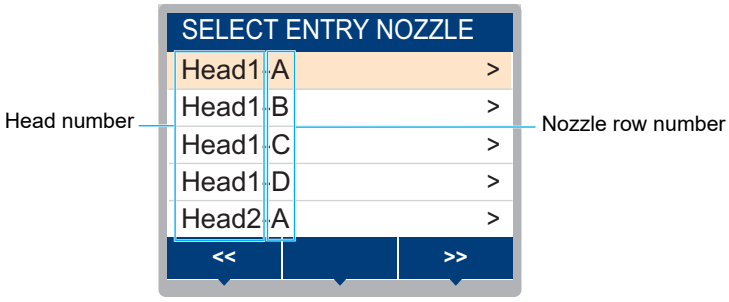

5 **Enter the "nozzle number" for nozzle recovery, then press the [ENTER] key.**

- Select the entry number before entering the nozzle number.
- Nozzle recovery is set.

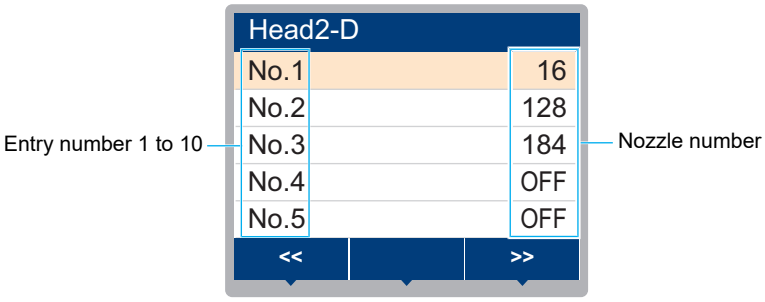

6 **Press the [ENTER] key once entry is complete.**

- Select [Maintenance] > [Nozzle Recovery] > [Test Print], then select "ON" to perform nozzle recovery and test printing. Test Printing

Nozzle Check

This is used to check for nozzle clogging before printing starts. Sets whether to perform maintenance functions automatically if nozzle clogging is detected.

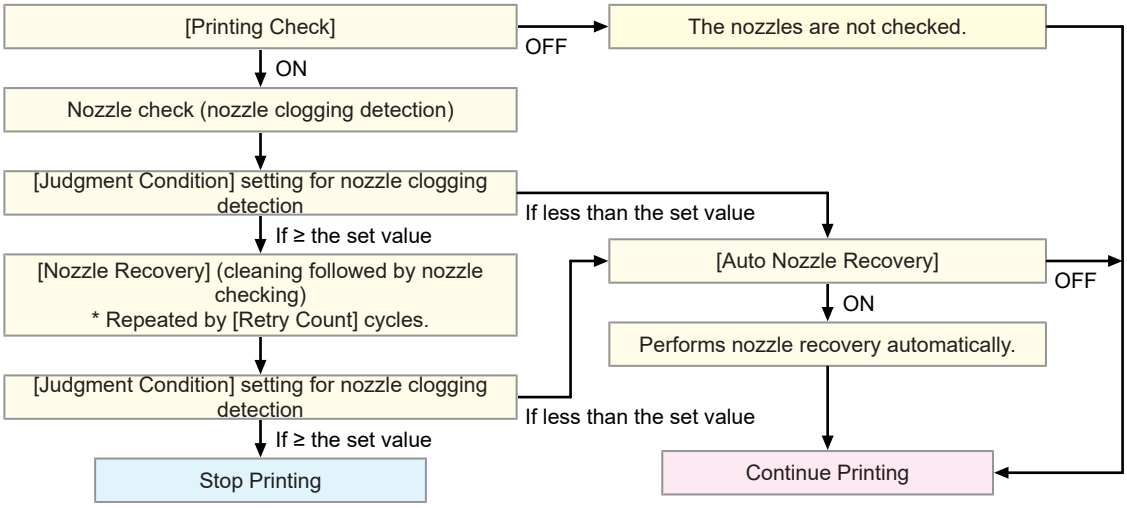

3.3 Function Setting Menu

This is used to set various operations to ensure optimal machine performance.

● Menu List

Item	Setting*1	Details
Logical Seek	Host/OFF/ON/ Media Width	Sets the range of carriage movement. • OFF: Machine size area 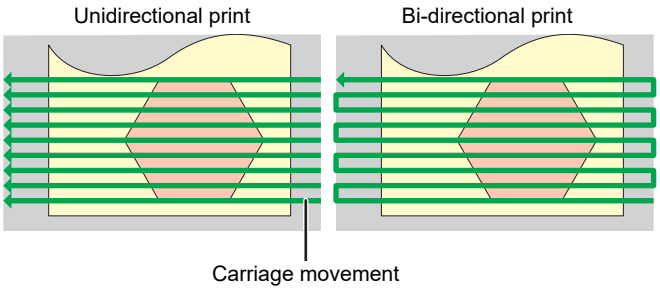 • ON: Print data area 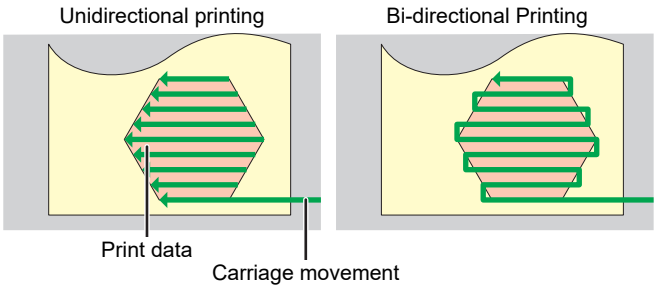 • Media Width: Media Size Area 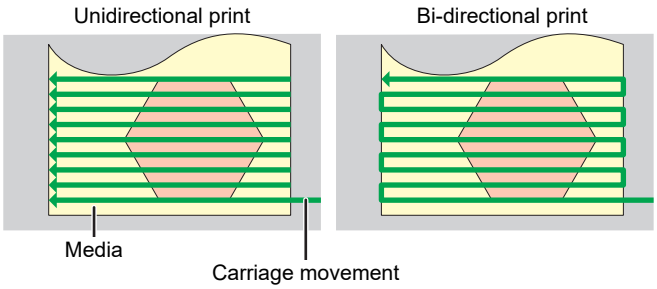
Feeding unit	ON/OFF	Sets whether or not to use the feeding unit. Set to "OFF" if the feeding unit is not used. • After changing the settings, you will need to adjust the torque limiter.☞ "About the Feed-Out Unit"(P. 55)
Drying Time	-	Sets the time for ink to dry.
Scan	Host/0.0 to 9.9 sec	Sets the stop time of the carriage after each scan. • The MIMAKI RIP software (RasterLink) indicates this as "Pause Time per Scan".
Print End	Host/0 to 120 min	Sets the stop time after printing. The next data is printed once the set time has elapsed. • The Mimaki RIP software (RasterLink) does not allow the user to specify Print End. If the machine is set to "HOST", the time will be "0".
Power Setting	-	Sets the times to turn the power on and off automatically.
Auto Power-off	5 to 15 to 60 min	Sets the time until the power is automatically turned off.

Item	Setting*1	Details
Auto Power-on	-	Sets the time to automatically turn on the power.
Setup	ON/OFF	Sets whether to turn on or off the power.
Time	0:00 to 23:59	Sets the time to turn on the power.
Day	Monday to Sunday	Sets whether to turn on or off the power on each day of the week.
Nozzle Check	ON/OFF	Automatically executes the nozzle check function when the machine is started with auto power-on. Performs nozzle recovery (cleaning followed by nozzle checking) if "nozzle clogging" is detected.
Cleaning	Soft/Normal/Hard	Sets the cleaning type.
Retry Count	0 to 3 times	Performs nozzle recovery (cleaning followed by nozzle checking) for the specified number of times.
WhiteSpace Setting	-	Sets the offset value from the media left and right standard margins (15 mm). • The left and right margins should be set to at least -5 mm when using the media holder. This eliminates the risk of printing on top of the media holder. • The Mimaki RIP software (RasterLink) does not allow the user to specify margins. If the machine is set to "Host", the offset value will be "0 mm" for the left and right margins.
Margin	-	
Margin/Left	Host/-10 to 85 mm	
Margin/Right		
Space Btwn PP.	None/0 to 500 mm	The space between prints can be eliminated for continuous printing. • Reducing the space length may cause media sagging, resulting in discrepancies in the distance the media is fed. • Depending on the data size and number of passes in the feed direction, the margins may be wider than the set value.
Space Feed Mode	Intermittent/Continuous	Alters the feed method for blank space included in the image data. • Intermittent: Uses intermittent feeding based on the timing of a fraction of the pass. • Continuous: Feeds forward by skipping blank parts.
View Feed	ON/OFF	Sets whether or not to feed the media forward to view the print results—for example, during test printing.
Feeding Before Cut	ON/OFF	Sets whether to feed media before cutting the media.
Auto Remote	ON/OFF	Sets whether to automatically switch to REMOTE mode and start printing if data is received locally.

*1. The default settings are shown underlined.

3.4 Environment Setting Menu

This is used to set various operations to ensure optimal machine performance.

Menu List

Item		Setting*1	Details
LANGUAGE		English / 日本語 / Deutsch / Português / Español/ Italiano / Korean	Sets the display language.
Time Set		-20 to 0 to +4 h	Sets the current time and date. (With respect to JST) • This can be set within the range of -20 to +4 hours.
Key Buzzer		ON/OFF	Sets an audible tone when keys are pressed. • Audible signals indicating errors, warnings, and operation end cannot be muted, even if "OFF" is selected for this setting.
Unit Setting		-	Set the display units.
	Temp.	°C/°F	Sets the display unit for temperature (Celsius/Fahrenheit).
	Length	mm/inch	Sets the display units for length and area. • Some items are displayed in "mm" even if "inch" is selected.
Network		-	Sets the network address. The machine must be restarted to enable this setting.
	Check IP Address	-	Displays the machine's current IP address. • It may take some time to determine the IP address. If the IP address cannot be determined, the display will indicate "0.0.0.0".
	Check MAC Address	-	Displays the machine's current MAC address.
	DHCP	ON/OFF	Select "ON" to use the IP address assigned by the DHCP server.
	AutoIP	ON/OFF	Select "ON" to use the IP address set by the AutoIP protocol. Note that DHCP takes priority if DHCP is set to "ON".
	Ip Address	-	Sets the IP address used by the machine. • This can be set when both [DHCP] and [AutoIP] are disabled.
	Default Gateway	-	Sets the default gateway used by the machine. • This can be set when both [DHCP] and [AutoIP] are disabled.
	DNS Address	-	Sets the DNS server address used by the machine. • This can be set when both [DHCP] and [AutoIP] are disabled.
	Sub Net Mask	-	Sets the subnet mask used by the machine. • This can be set when both [DHCP] and [AutoIP] are disabled.
Remote Control		-	An application (MRA: Mimaki Remote Access) is required to use the remote control function. MRA is a remote access tool installed on a computer or smartphone that allows viewing of product information and panel operation from a remote location away from the machine (within the same network segment).
	Setup	Enable/ Disable	Enable/disable remote control.

Item		Setting*1	Details
	PIN code	0000 to 9999	Enter the same PIN code as MRA. The PIN code is used for authentication between the machine and MRA. • When the machine is set to "0000", MRA can access the machine with any PIN code.
	KeyLife	5 to 30 to 120 min	Sets the time interval before disconnecting the machine and MRA if no operations are performed using MRA.
Machine Reset		-	Initializes the details set.

*1. The default settings are shown underlined.

3.5 Machine Status Menu

This is used to check machine information.

Menu List

Item		Details
Usage	WIPING	Displays the wiping count. • To reset this count, press the [FUNC2] key while the count is displayed.
	Capping Use Days	Displays the number of days since the cap was replaced.
	Waste Ink Tank	Displays the approximate level of waste ink in the waste ink tank as a percentage. • To reset waste ink levels, press the [FUNC1] key while the level is displayed.
	Print Length	Displays the total length printed.
	Print Area	Displays the total area printed.
	Use Time	Displays the total time the power has been turned on.
Maintenance History	Maintenance	Displays a record of maintenance function execution (up to 10). • Cleaning☞ P. 65, Wash Wiping☞ P. 65, Pump Tube Cleaning ☞ P. 99, Nozzle Washing☞ P. 122, Circulation
	Replace Wiper	Displays a record of wiper replacement (up to 5). ☞ P. 106
	Ink replacement	Displays a record of ink pack replacement for each ink slot (up to 5).☞ "Replacing Ink"(P. 43) • Slot 1 to 16
Version		Displays the machine firmware and other versions.
Error History		Displays the error and warning history. • These are listed in chronological order. Use the keys to cycle through occurrence time/date and error/warning information.
List		This is used to print machine information.

Chapter 4 Maintenance

This chapter

To ensure years of precise performance, maintain the machine periodically based on frequency of use.
Read the maintenance precautions thoroughly before maintaining this product.

Maintenance Precautions 90

Maintenance Methods 91
- Maintenance Items and Timing 91
- Ink Maintenance 92
- Wiper Cleaning 93
- Cap Rubber Cleaning 95
- NCU Cleaning 96
- Carriage Underside Cleaning 97
- Automatic Correction Sensor (DAS) Cleaning 98
- Ink Discharge Channel Cleaning 99
- Media Sensor Cleaning 100
- Media Holder Cleaning 101
- Platen Cleaning 101
- Washing Tray Cleaning 102
- Cover (Exterior) Cleaning 103
- When this Printer is Left Unused for a Long Time 104

Replacement of Consumable Item 106
- Wiper Replacement 106
- Cap Replacement 107
- Exhaust Fan Filter Replacement 109
- Pinch Roller Replacement 110
- Media Holder Replacement 111
- Media Cutter Replacement 113
- Waste Ink Tank Replacement 115

Ink Cartridge Correction 118
- Correcting the ink cartridge weight 118

4.1 Maintenance Precautions

- This machine includes parts that must be replaced periodically. We therefore recommend taking out a maintenance contract. Carry out maintenance periodically and replace consumable items to prevent quality defects and accidents.

⚠ WARNING

- Clean periodically. Debris and dust will accumulate on electrical components when the machine is used for extended periods. There is a risk of failure, electric shock, or fire due to current leakage.
- Do not clean by blowing—e.g., avoid using air blowers. Doing so may lead to failure, electric shock, or fire involving the machine if airborne debris or dust gets inside electrical components. Wipe using a soft cloth soaked in diluted neutral detergent and thoroughly wrung out. A vacuum cleaner may also be used for cleaning.

- Be careful to prevent liquids from getting inside the machine. Otherwise there is a risk of failure, electric shock, or fire.

⚠ CAUTION

- For heavy soiling, wipe using a soft cloth soaked in diluted neutral detergent and thoroughly wrung out.

- Pay close attention to ventilation and be sure to wear safety glasses, gloves, and a mask when handling ink, maintenance liquid, waste ink, or other solutions used with the machine. Leaking ink may adhere to the skin or get into the eyes or mouth.

NOTICE

- Never touch the print head nozzle surface. Do not allow water or alcohol to come into contact with the print nozzle surface. This will increase the risk of machine failure or ejection failures (e.g., nozzle clogging or deflection).
- Do not use cotton swabs to clean around the head or carriage. Fibers from cotton swabs may adhere to the head nozzle surface and lead to ejection failures (e.g., nozzle clogging or deflection).
- Do not splash ink or maintenance liquid on the covers. Exposure to splashing ink or maintenance liquid may damage or deform the cover.
- Do not use benzine, thinner, or any chemical agent containing abrasives. Use of these chemicals may result in damage to or deformation of parts.
- Do not use organic solvents such as acetone and IPA. Doing so may damage the machine.
- Do not move the carriage by hand. To move the carriage, use the carriage out function on the menu.

4.2 Maintenance Methods

Maintenance Items and Timing

Timing	Item
Periodically	Shake the Ink cartridge. ☞ "Ink Maintenance"(P. 92)
Before starting the day's work	Clean the wiper and wiper bracket. ☞ "Wiper Cleaning"(P. 93)
	Clean the cap rubber. ☞ "Cap Rubber Cleaning"(P. 95)
	Clean the underside of the carriage. ☞ "Carriage Underside Cleaning"(P. 97)
At the end of the week's work	Clean the wiper and wiper bracket. ☞ "Wiper Cleaning"(P. 93)
	Clean the cap rubber. ☞ "Cap Rubber Cleaning"(P. 95)
	Clean the NCU. ☞ "NCU Cleaning"(P. 96)
	Clean the underside of the carriage. ☞ "Carriage Underside Cleaning"(P. 97)
	Clean the DAS sensor. ☞ "Automatic Correction Sensor (DAS) Cleaning"(P. 98)
	Clean the ink discharge channel. ☞ "Ink Discharge Channel Cleaning"(P. 99)
	Clean the media sensor. ☞ "Media Sensor Cleaning"(P. 100)
	Clean the media holder. ☞ "Media Holder Cleaning"(P. 101)
	Clean the platen. ☞ "Platen Cleaning"(P. 101)
	Clean the cover (exterior). ☞ "Cover (Exterior) Cleaning"(P. 103)
	Check the waste ink levels in the waste ink tank. ☞ "Replacing the Waste Ink Tank"(P. 115)
Once a month	Clean the washing tray. ☞ "Washing Tray Cleaning"(P. 102)
When not used for more than a week	Clean the wiper and cap and wash the ink discharge channel. After cleaning, store without turning off the main power supply. ☞ "When this Printer is Left Unused for a Long Time"(P. 104)

Items Required for Maintenance

To order replacement consumable items, contact your local dealer or our service office. For more information on consumable items, refer to our website (https://mimaki.com/supply/inkjet.html).

- Do not store consumable items in locations where children may enter.

Ink Maintenance

If ink constituents are sedimented, the ink density may become uneven. We recommend shaking the Ink cartridge periodically to keep printing consistent.

White ink: 40 times

- When the power has been on for more than 24 hours
- If the "Shake the white cartridge" warning message appears when the power is turned on

- If 3 or more days have elapsed, shake the white ink 100 times.
- The white ink is susceptible to settling, so should be shaken periodically. Also, be sure to shake the white ink before printing.

Other colors: 20 times

- Be sure to perform maintenance once a week before starting work.

Shaking the Ink cartridge

1 Shake the Ink cartridge to the left and right slowly.

- Shake from left to right to ensure that the ink flows.

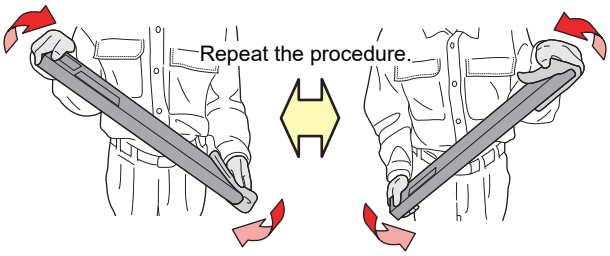

Important!

- Do not shake ink cartridges excessively. Excessive shaking may damage the pack inside and cause ink to leak.

- When using an ink cartridge with ink remaining, hold a paper towel over the ink cartridge opening and gap at the side, then shake slowly with the ink cartridge tilted upright.

Wiper Cleaning

The wiper wipes off ink adhering to the print head nozzle surface. Using a dirty wiper with dried ink or dust on it may cause the wiper to rub against the nozzle surface and lead to ejection failures (such as nozzle clogging or deflection).

- Be careful to avoid leaving fragments from the cleaning stick behind when cleaning. These fragments will increase the risk of ejection failures (e.g., nozzle clogging or deflection).

1 **On the LOCAL mode screen, select [MENU] > [Maintenance], then press the [ENTER] key.**

- The Maintenance menu is displayed.

2 **Select [Station Maint.] > [Carriage Out] > [Move To Platen Right End], then press the [ENTER] key.**

- The carriage moves over the platen.

3 **Open the front cover.**

4 **Remove the wiper.**

- Press the lugs on both sides of the wiper bracket, then pull out the wiper.

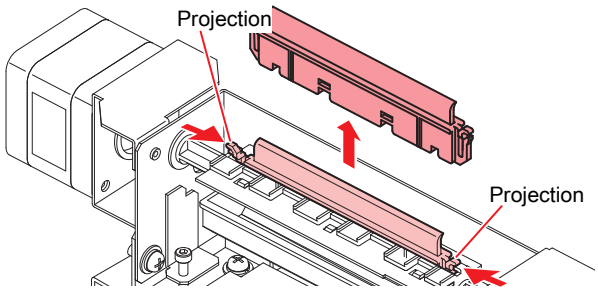

5 **Clean the wiper and bracket.**

- Wipe off any ink and dust adhering using a cleaning stick moistened with maintenance liquid. Wipe off the maintenance liquid. Make sure none remains.

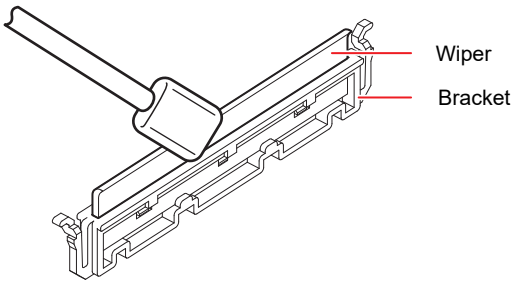

- Replace dirty or warped wipers with new ones. ☞ "Wiper Replacement"(P. 106)

6 **Clean the wiper holder.**

- Use a cleaning stick to clean inside the groove highlighted in red in the figure below.

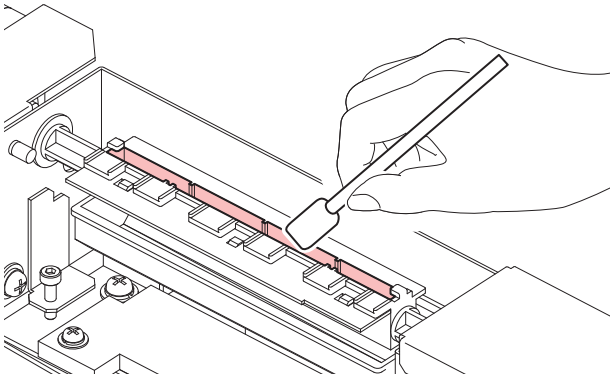

7 **Reattach the wiper at the original position.**

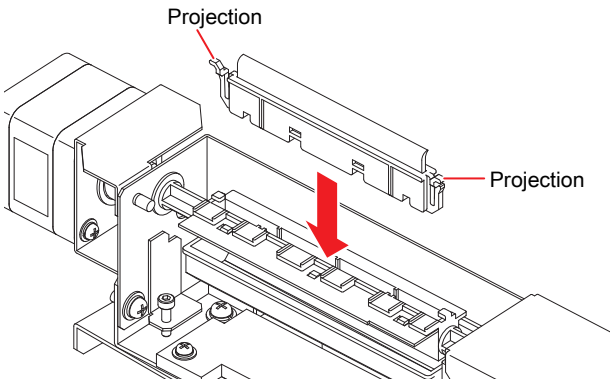

8 **Once cleaning is complete, close the cover, then press the [ENTER] key.**

Cap Rubber Cleaning

The cap prevents the print head nozzle surface from drying out. Continuing to use a dirty cap may affect ink take-up and lead to ejection failures (such as nozzle clogging or deflection).

- Be careful to avoid leaving fragments from the cleaning stick behind when cleaning. These fragments will increase the risk of ejection failures (e.g., nozzle clogging or deflection).

1 **On the LOCAL mode screen, select [MENU] > [Maintenance], then press the [ENTER] key.**

- The Maintenance menu is displayed.

2 **Select [Station Maint.] > [Carriage Out] > [Move To Platen Right End], then press the [ENTER] key.**

- The carriage moves over the platen.

3 **Open the front cover.**

4 **Clean the cap rubber.**

- Wipe off any ink and dust adhering using a cleaning stick moistened with maintenance liquid. Wipe off the maintenance liquid. Make sure none remains.

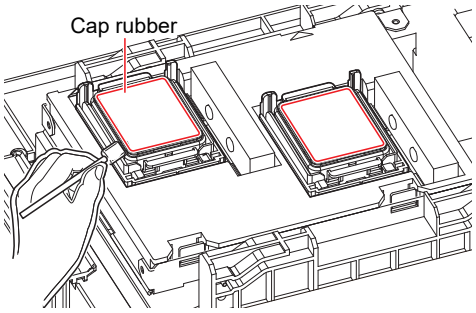

5 **Check to confirm that the cap slider is not tilted once cleaning is complete.**

- If the cap slider is tilted, move the slider block to the left or right to correct the tilt.

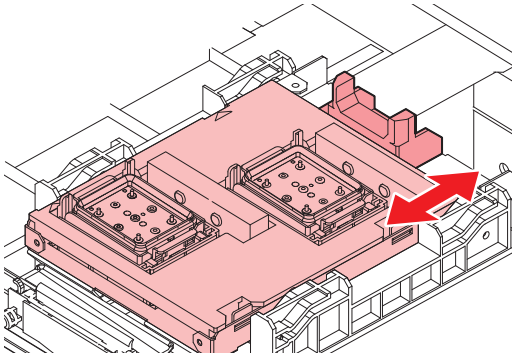

6 **Close the front cover, then press the [ENTER] key.**

NCU Cleaning

The NCU uses a sensor to monitor the ink droplets ejected from the print head nozzles. Continuing to use the dirty NCU may prevent the nozzle check function from operating correctly.

- Be careful to avoid leaving fragments from the cleaning stick behind when cleaning. These fragments will increase the risk of ejection failures (e.g., nozzle clogging or deflection).

1 **On the LOCAL mode screen, select [MENU] > [Maintenance], then press the [ENTER] key.**

- The Maintenance menu is displayed.

2 **Select [Station Maint.] > [Carriage Out] > [Move To Platen Right End], then press the [ENTER] key.**

- The carriage moves over the platen.

3 **Open the front cover.**

4 **Clean the NCU.**

- Wipe off any ink and dust adhering using a cleaning stick moistened with maintenance liquid. Wipe off the maintenance liquid. Make sure none remains.

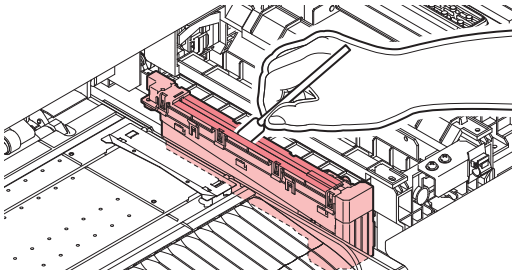

- Insert the cleaning stick as far as the line shown in the illustration.

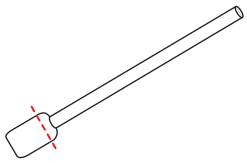

5 **Once cleaning is complete, close the cover, then press the [ENTER] key.**

Carriage Underside Cleaning

The underside of the carriage becomes coated with ink wiped off by the wiper. Continuing to use the dirty carriage underside will rub dried ink and attached dust on to the media, resulting in contaminated prints.

The print head uses an extremely delicate mechanism. Take great care when handling it.

- Be careful to avoid leaving fragments from the cleaning stick behind when cleaning. These fragments will increase the risk of ejection failures (e.g., nozzle clogging or deflection).

1 **On the LOCAL mode screen, select [MENU] > [Maintenance], then press the [ENTER] key.**

- The Maintenance menu is displayed.

2 **Select [Station Maint.] > [Carriage Out] > [Move To Maint. Space], then press the [ENTER] key.**

- The carriage moves to the maintenance space.

3 **Open the maintenance covers.**

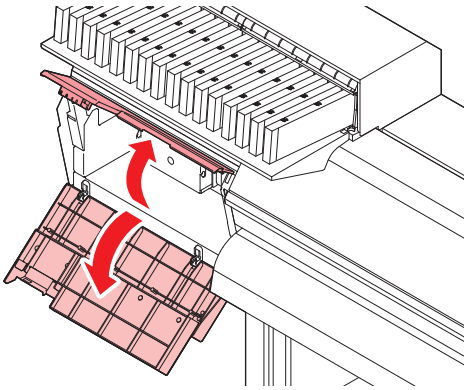

4 **Clean around the print head.**

- Wipe off any ink and dust adhering using a cleaning stick moistened with maintenance liquid. Wipe off the maintenance liquid. Make sure none remains.

Clean the print head sides and all around the nozzle plate using a cleaning stick.

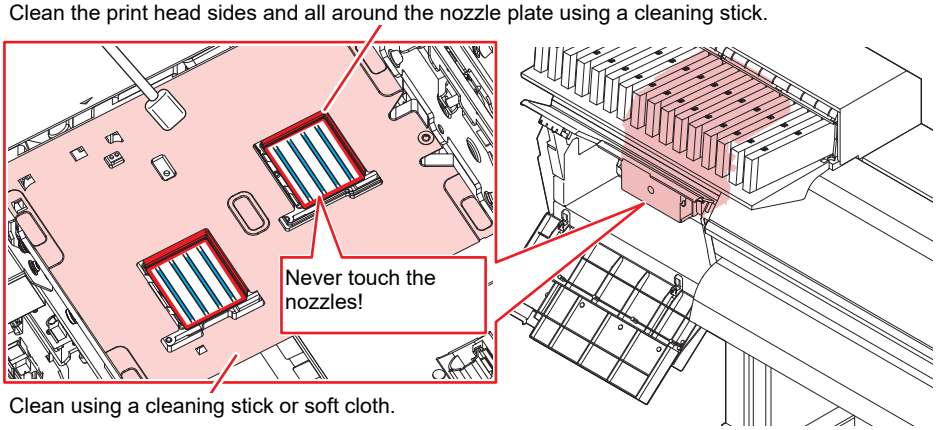

Clean using a cleaning stick or soft cloth.

- Never touch the print head nozzle surface.

5 **Once cleaning is complete, close the cover, then press the [ENTER] key.**

Automatic Correction Sensor (DAS) Cleaning

The DAS sensor is located on the carriage underside. If dust or debris accumulates on the sensor, the auto-correction function (automatic correction of the drop positions) may not function correctly.

1 **On the LOCAL mode screen, select [MENU] > [Maintenance], then press the [ENTER] key.**

- The Maintenance menu is displayed.

2 **Select [Station Maint.] > [Carriage Out] > [Move To Maint. Space], then press the [ENTER] key.**

- The carriage moves to the maintenance space.

3 **Open the maintenance covers.**

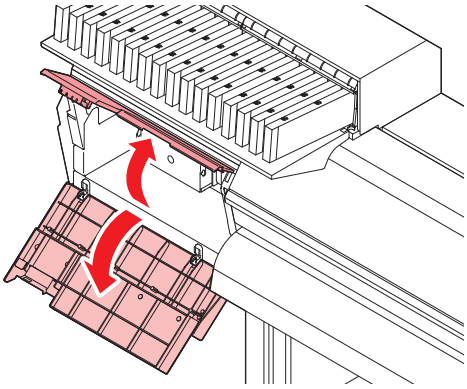

4 **Clean the DAS sensor.**

- Wipe clean using cotton swabs or a soft cloth.

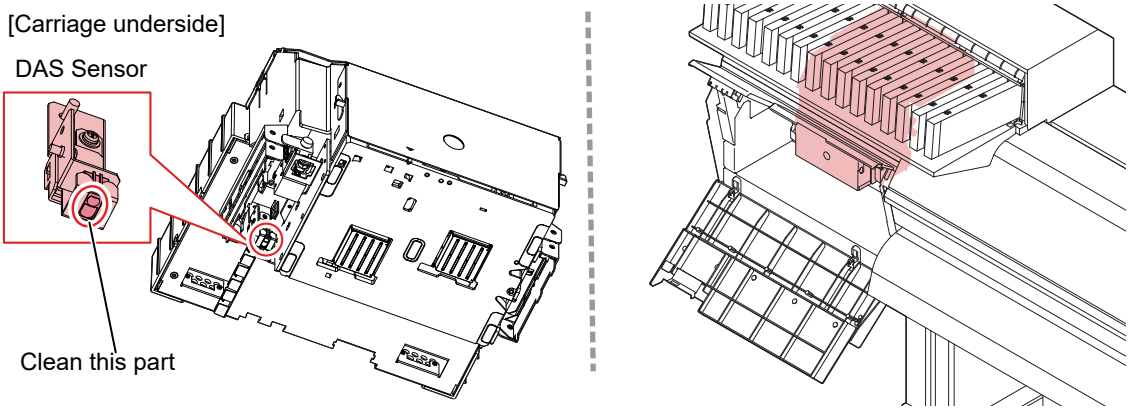

- For heavy soiling, wipe using a soft cloth soaked in diluted neutral detergent and thoroughly wrung out.

5 **Once cleaning is complete, close the cover, then press the [ENTER] key.**

Ink Discharge Channel Cleaning

Clean the ink discharge channel regularly to prevent clogging of the ink discharge channel below the cap.

1 **On the LOCAL mode screen, select [MENU] > [Maintenance], then press the [ENTER] key.**

- The Maintenance menu is displayed.

2 **Select [Station Maint.] > [Pump tube cleaning], then press the [ENTER] key.**

- The cap is filled with maintenance liquid.

- Close the front cover. The cap cannot be filled with maintenance liquid unless the front cover is closed. This is also true if the maintenance liquid cartridge is empty.

3 **Open the front cover.**

- Check to confirm that the cap is filled with maintenance liquid.

- If not, use a syringe to draw up some maintenance liquid and fill until it almost overflows from the cap.

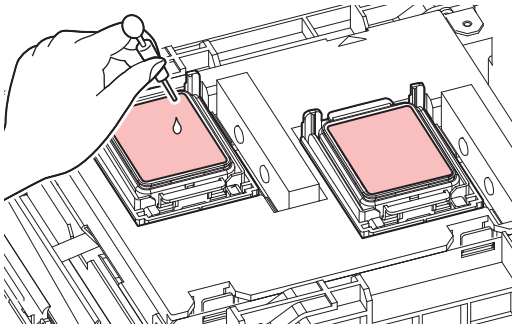

4 **Close the front cover, then press the [ENTER] key.**

- Pump tube (ink discharge channel below the cap) washing starts.

Media Sensor Cleaning

Media sensors are located on the rear cover and carriage underside. The media cannot be detected correctly if dust or debris accumulates on the sensors. Remove any debris using cotton swabs or a soft cloth.

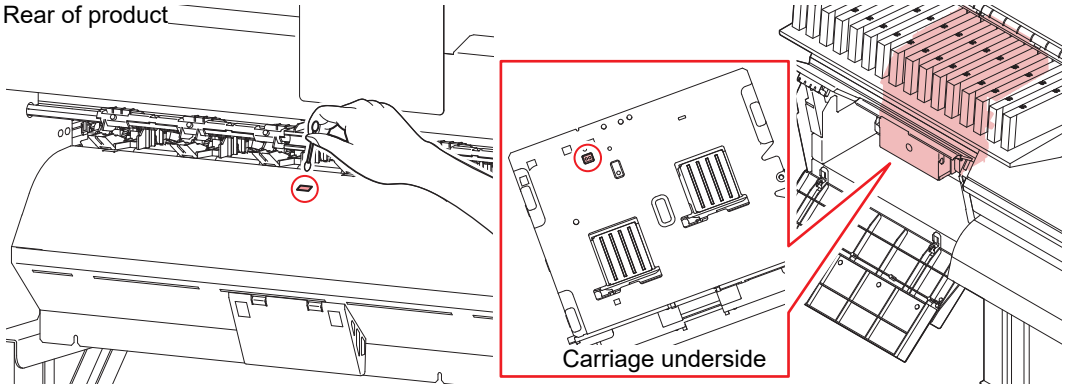

Cleaning the carriage underside sensor

1 **On the LOCAL mode screen, select [MENU] > [Maintenance], then press the [ENTER] key.**

- The Maintenance menu is displayed.

2 **Select [Station Maint.] > [Carriage Out] > [Move To Maint. Space], then press the [ENTER] key.**

- The carriage moves to the maintenance space.

3 **Open the maintenance covers.**

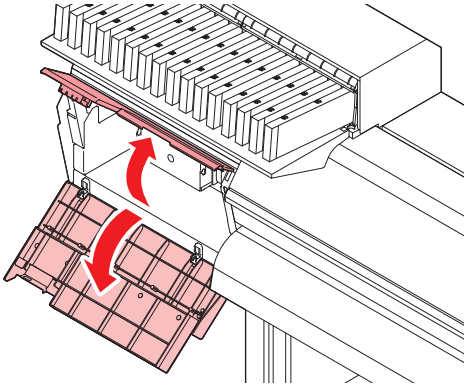

4 **Clean the media sensor.**

5 **Once cleaning is complete, close the cover, then press the [ENTER] key.**

Media Holder Cleaning

- Turn off the main power supply and unplug the power cable before carrying out maintenance.

- Be careful to prevent liquids from getting inside the machine. Otherwise there is a risk of failure, electric shock, or fire.

Continuing to use the dirty platen will prevent proper feeding of the media. It will also cause dried ink and attached dust to rub against the head nozzle surface and lead to ejection failures (e.g., nozzle clogging or deflection).

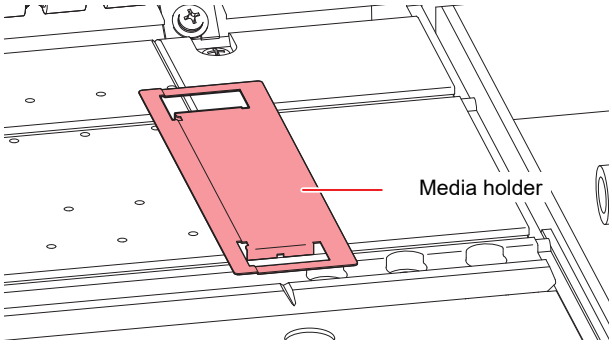

- For heavy soiling, wipe using a soft cloth soaked in diluted neutral detergent and thoroughly wrung out.

Platen Cleaning

- Turn off the main power supply and unplug the power cable before carrying out maintenance.

- Be careful to prevent liquids from getting inside the machine. Otherwise there is a risk of failure, electric shock, or fire.

Continuing to use the dirty platen will prevent proper feeding of the media. It will also cause dried ink and attached dust to rub against the head nozzle surface and lead to ejection failures (e.g., nozzle clogging or deflection).

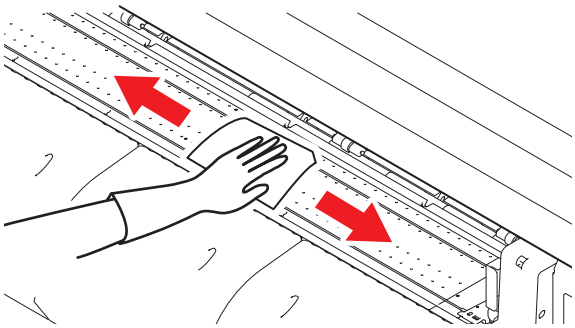

- The grooves in which the media holder slides and the media is cut are susceptible to dust accumulation. Remove any debris carefully.

- For heavy soiling, wipe using a soft cloth soaked in diluted neutral detergent and thoroughly wrung out.

Washing Tray Cleaning

1 **On the Local mode screen, select [Menu] > [Maintenance], then press the [ENTER] key.**

- The Maintenance menu is displayed.

2 **Select [Station Maint.] > [Wiper maintenance] > [wash tray cleaning], then press the [ENTER] key.**

- The carriage moves over the platen.

3 **Open the front cover.**

4 **Use a cloth to soak up any maintenance liquid inside the washing tray.**

- Be careful to avoid any ink or maintenance liquid dripping.

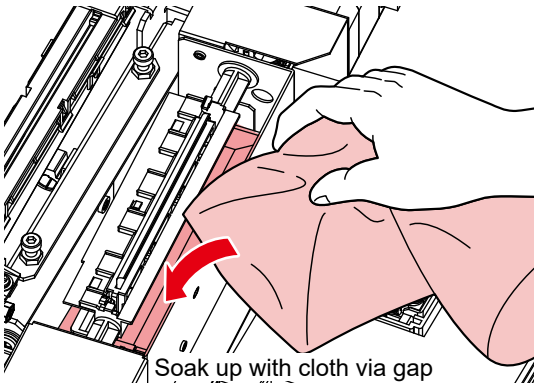

5 **Use a cleaning stick moistened with maintenance liquid to remove any coagulated ink on the bottom of the washing tray.**

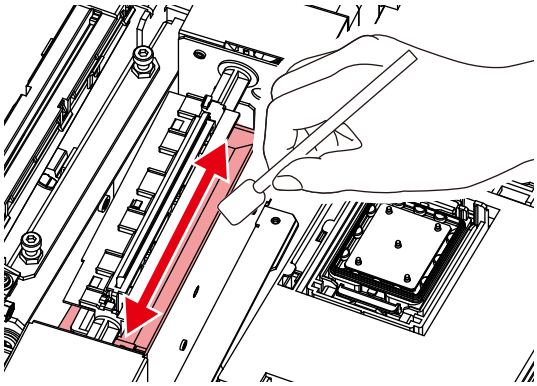

6 **Once cleaning is complete, close the cover, then press the [ENTER] key.**

- Maintenance liquid is automatically added to the washing tray.

If automatic filling is not possible because the maintenance liquid cartridge is empty or not loaded.

- Use a syringe to manually fill with maintenance liquid via the gap.
- Guideline: Add approximately 25 cc or to a level 9 to 10 mm below the Tray Full line.

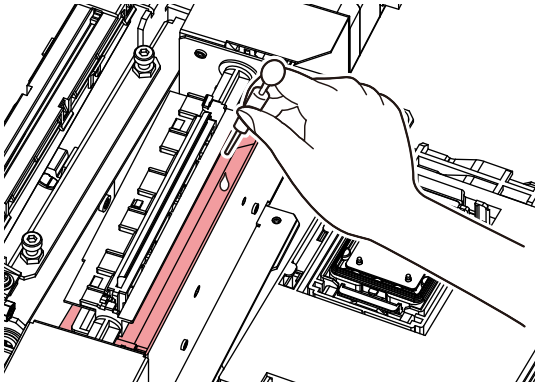

Important!

- There is no risk of overflowing, as the liquid automatically drains to the waste liquid tank if it exceeds a preset level. However, the guideline should be observed, as filling above the guideline increases the consumption of maintenance liquid and also affects level monitoring of the waste liquid tank.

Cover (Exterior) Cleaning

- Be careful to prevent liquids from getting inside the machine. Otherwise there is a risk of failure, electric shock, or fire.

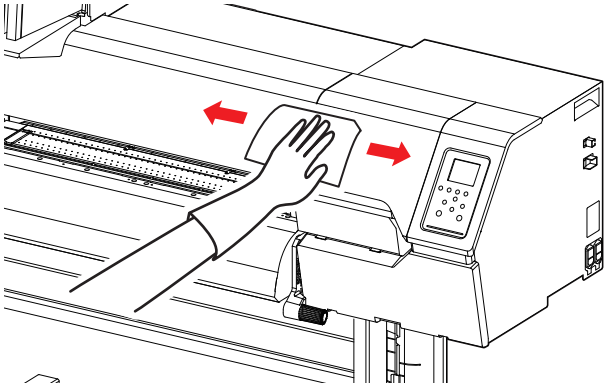

- For heavy soiling, wipe using a soft cloth soaked in diluted neutral detergent and thoroughly wrung out.

When this Printer is Left Unused for a Long Time

Clean as follows if the product is not used for one week or longer:

Check beforehand
Is [Near End] or [Ink End] displayed? • Maintenance liquid and ink is aspirated during the washing operation. Washing is not possible if an error occurs during this process. Replace with new ink.

1 **On the LOCAL mode screen, select [MENU] > [Maintenance], then press the [ENTER] key.**

- The Maintenance menu is displayed.

2 **Select [Station Maint.] > [Custody Wash], then press the [ENTER] key.**

- The carriage moves over the platen.

3 **Open the front cover.**

4 **Clean the wiper and bracket.**

- ☞ "Wiper Cleaning"(P. 93)

5 **Press the [ENTER] key once cleaning is complete.**

- "Cap Cleaning Completed (Next) [ENT]" appears on the display.

6 **Clean the cap rubber.**

- ☞ "Cap Rubber Cleaning"(P. 95)

7 **Once cleaning is complete, close the cover, then press the [ENTER] key.**

- The cap is filled with maintenance liquid.

- Close the front cover. The cap cannot be filled with maintenance liquid unless the front cover is closed. This is also true if the maintenance liquid cartridge is empty.

8 **Open the front cover.**

- Check to confirm that the cap is filled with maintenance liquid.

- If not, use a syringe to draw up some maintenance liquid and fill until it almost overflows from the cap.

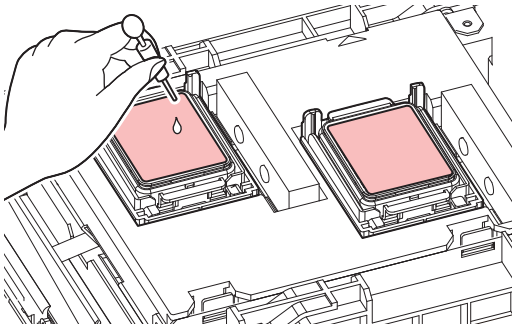

9 **Close the front cover.**

10 Set the exposure time, then press the [ENTER] key.

- Print nozzle washing starts. The elapsed time is displayed on the display.
- Cleaning is performed automatically once print nozzle washing has ended.
- The cap is filled with maintenance liquid.

- Close the front cover. The cap cannot be filled with maintenance liquid unless the front cover is closed. This is also true if the maintenance liquid cartridge is empty.

11 Open the front cover.

- Check to confirm that the cap is filled with maintenance liquid.

- If not, use a syringe to draw up some maintenance liquid and fill until it almost overflows from the cap.

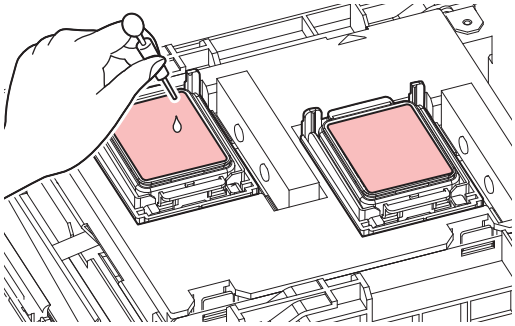

12 Close the front cover, then press the [ENTER] key.

- Pump tube (ink discharge channel below the cap) washing starts.

- Do not turn off the main power supply. Turning off the main power supply will disable the automatic maintenance function (including nozzle clogging prevention function and ink discharge channel cleaning function). This increases the risk of ejection failures (such as nozzle clogging or deflection).

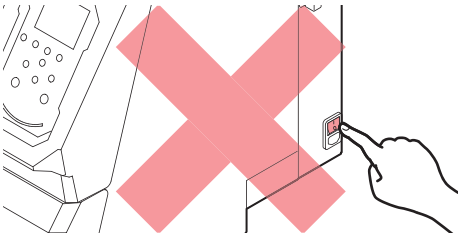

- Do not leave media loaded on the platen. This may leave irregularities or ripples in the media.

When the machine is not in use, raise the clamp lever to separate the pinch rollers from the grit rollers.

- Leaving the pinch rollers lowered may cause them to become deformed and prevent media from being fed correctly.
- Leaving media loaded will subject it to force from the pinch rollers, which may leave pinch roller marks on it.

- Perform the following if the "Check Waste Ink Tank" message appears on the display.
  ☞ "Waste Ink Tank Replacement"(P. 115)

4.3 Replacement of Consumable Item

To order replacement consumable items, contact your local dealer or our service office. For more information on consumable items, refer to our website (https://mimaki.com/supply/inkjet.html).

- Do not store consumable items in locations where children may enter.

- When disposing of consumable items, contact an industrial waste disposal operator or dispose of the product in accordance with the local laws and regulations.

Wiper Replacement

The machine maintains a count of the number of wiping cycles. The "Replace Wiper" message appears when a preset count is reached. Replace dirty or warped wipers with new ones.

1 **"Replace Wiper" appears on the display.**

2 **On the LOCAL mode screen, select [MENU] > [Maintenance], then press the [ENTER] key.**

- The Maintenance menu is displayed.

3 **Select [Station Maint.] > [Wiper maintenance] > [Replace Wiper], then press the [ENTER] key.**

- The carriage moves over the platen.

4 **Open the front cover.**

5 **Remove the wiper.**

- Press the lugs on both sides of the wiper bracket, then pull out the wiper.

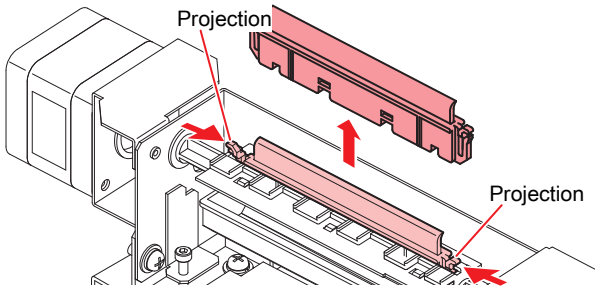

6 **Clean the wiper holder.**

- Wipe off any ink and dust adhering using a cleaning stick moistened with maintenance liquid. Wipe off the maintenance liquid. Make sure none remains.

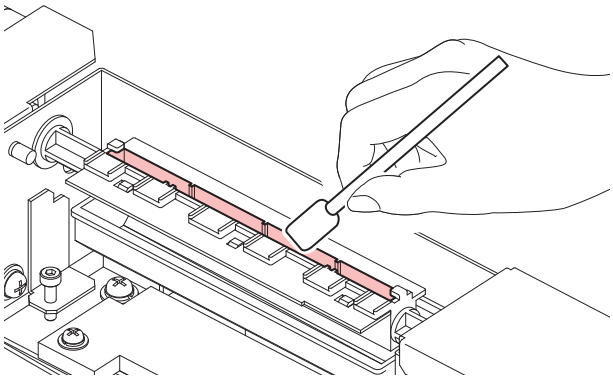

7 **Mount a new wiper.**

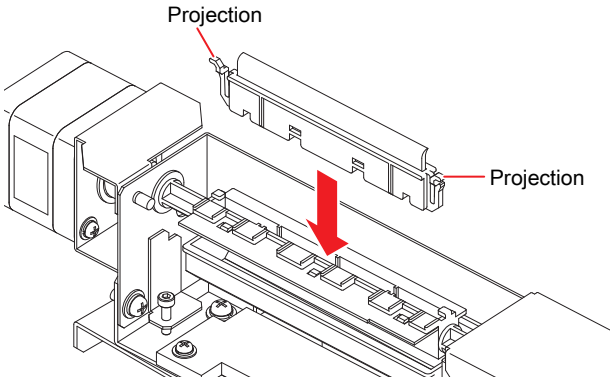

8 **Once replacement is complete, close the cover, then press the [ENTER] key.**

- The wiper usage count is reset.

Cap Replacement

If ejection failures (e.g., nozzle clogging or deflection) remain unresolved even after cleaning, replace with a new cap.

- Be sure to replace the cap if you observe any scratches or other damage on the rim.

1 **On the LOCAL mode screen, select [MENU] > [Maintenance], then press the [ENTER] key.**

- The Maintenance menu is displayed.

2 **Select [Station Maint.] > [Replace Cap], then press the [ENTER] key.**

- The carriage moves over the platen.

3 **Open the front cover.**

4 **Remove the cap.**

- Squeeze the lugs on either side of the cap and pull off.

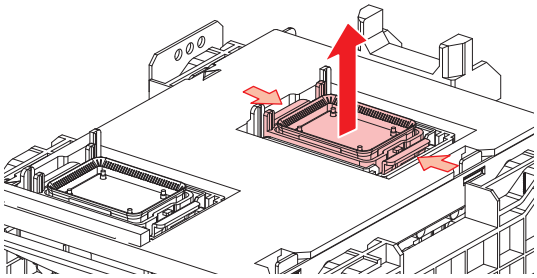

5 **Apply maintenance liquid.**

- Use a syringe to apply two or three drops of maintenance liquid to the hole at the front.

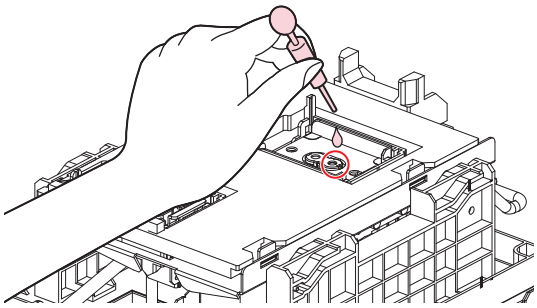

6 **Mount a new cap.**

- Position with the slot at the front and push in until it clicks.

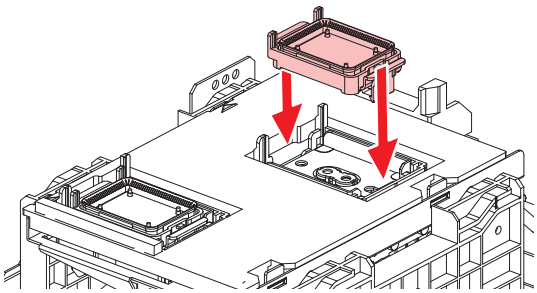

7 **Once replacement is complete, close the cover, then press the [ENTER] key.**

Exhaust Fan Filter Replacement

Check the exhaust fan filter condition. Replace if very dirty.

1 Remove the exhaust fan box.

- Push the tabs at the front to remove the exhaust fan box.

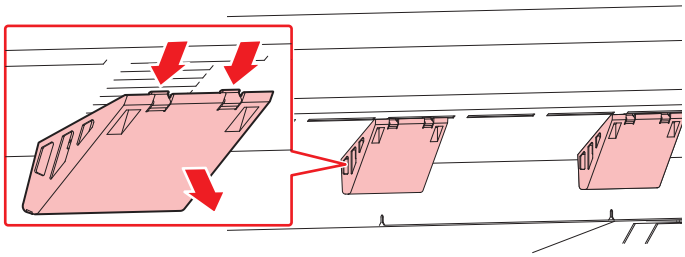

- Replace the very dirty exhaust fan box with new one.

2 Mount a new exhaust fan filter in the exhaust fan box.

- Press the exhaust fan filter into the space under the tabs of the exhaust fan box.

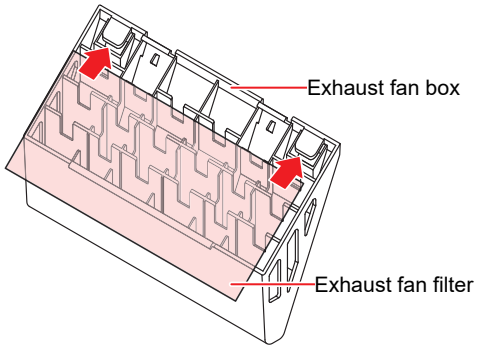

3 Mount the exhaust fan box.

- Insert the tabs of the exhaust fan box into the slits of the machine, and clip in the tabs at the front.

- Do not use the slit at the top.

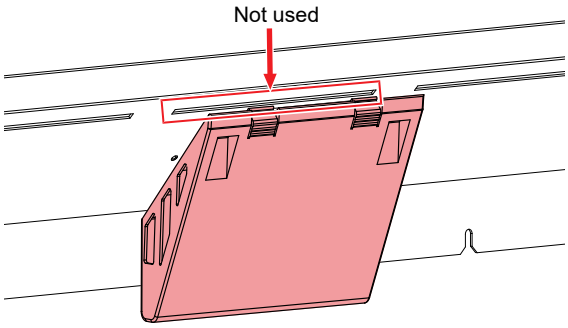

Pinch Roller Replacement

Replace worn or dirty pinch rollers with new ones.

- Turn off the main power and unplug the power cable before replacement.

1 **Open the front cover.**

2 **Raise the clamp lever.**

3 **Remove the O-ring retaining the pinch rollers.**

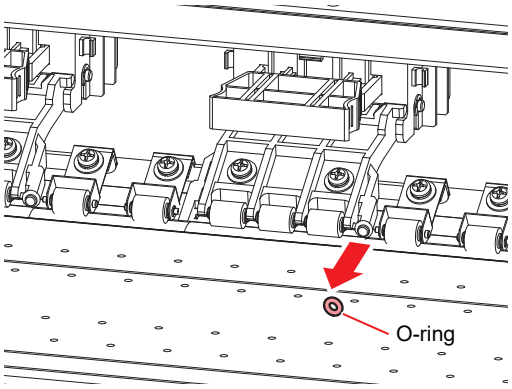

- The pinch rollers are small. Be careful to avoid dropping them into the product interior.

4 **Remove the pinch rollers.**

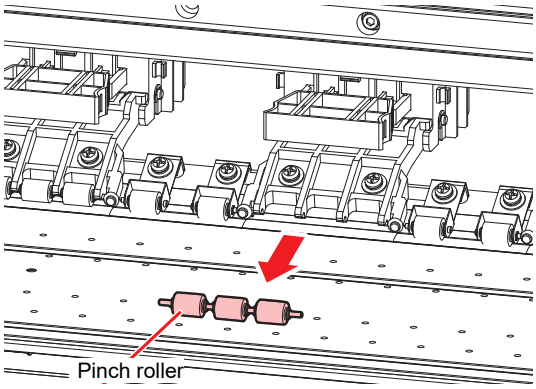

5 **Mount new pinch rollers, and secure them using the O-ring.**

6 **Close the front cover.**

Media Holder Replacement

If the media holder becomes deformed and touches the carriage or print head, replace with a new media holder.

- Turn off the main power and unplug the power cable before replacement.

1 **Open the maintenance covers.**

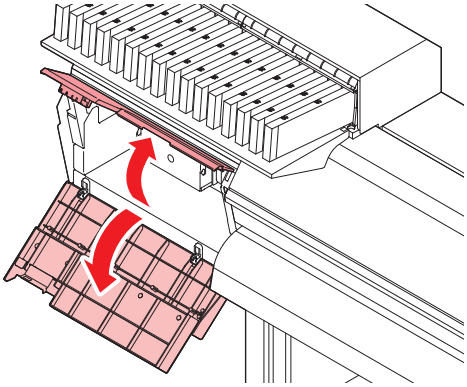

2 **Remove the side screw, and detach the media holder stopper.**

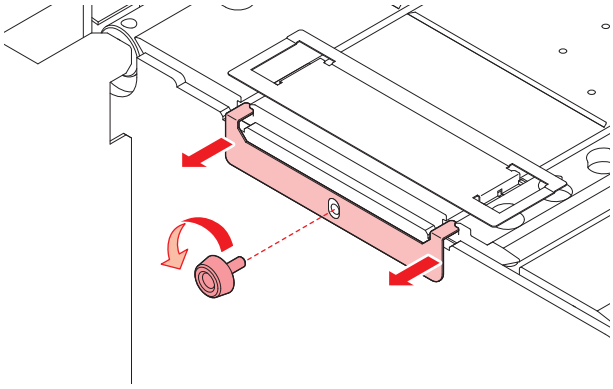

3 **Remove the media holder.**

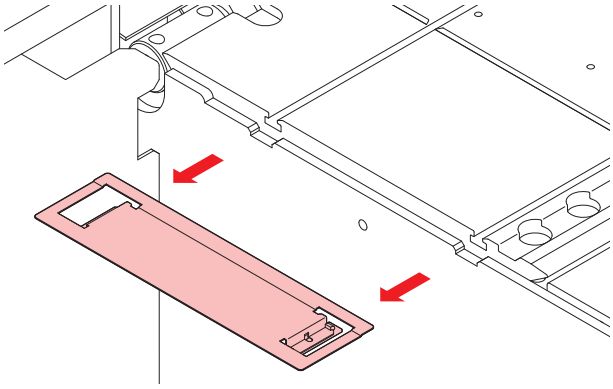

4 **Remove the media holder guides from the media holder.**

- Be careful not to misplace the media holder guides after removing them.

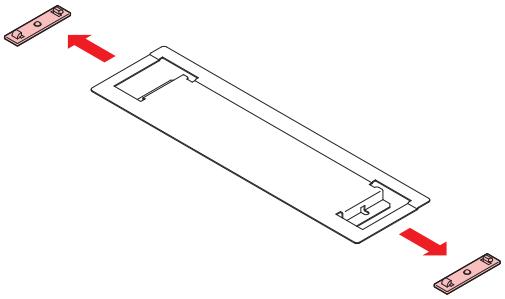

5 **Mount the media holder guides onto the new media holder.**

- Engage the media holder onto the lugs on the media holder guides.

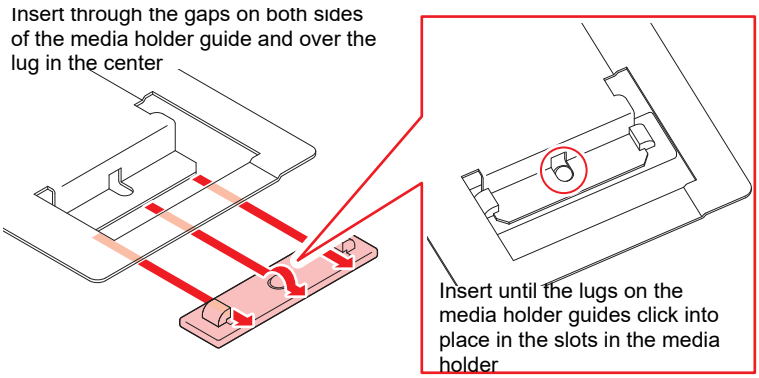

6 **Mount the new media holder on to the platen.**

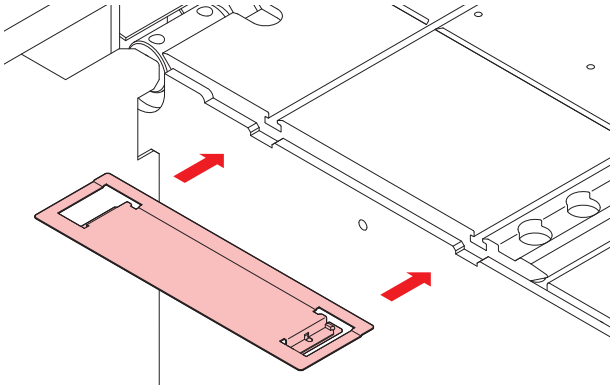

7 **Secure the media holder stopper with the screw.**

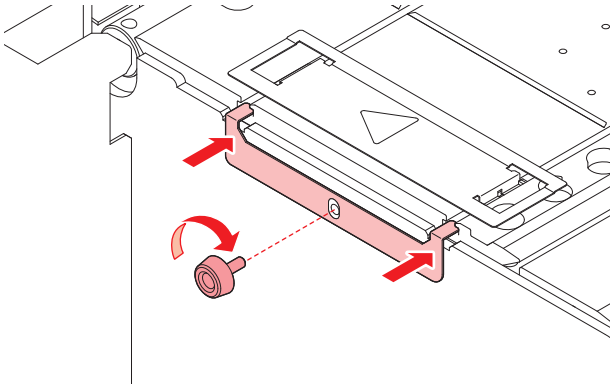

8 **Close the maintenance covers.**

Media Cutter Replacement

Replace cutters when blades are chipped or blunt.

- Avoid touching the cutter blade. Failure to do so may result in injury.

1 **On the LOCAL mode screen, select [MENU] > [Maintenance], then press the [ENTER] key.**

- The Maintenance menu is displayed.

2 **Select [Station Maint.] > [Carriage Out] > [Move To Platen Right End], then press the [ENTER] key.**

- The carriage moves over the platen.

3 **Open the front cover.**

- The carriage can be moved by hand. Move the carriage slowly to a position allowing easy access while working.

4 Replace the media cutter.

(1) Unscrew the cutter screw.

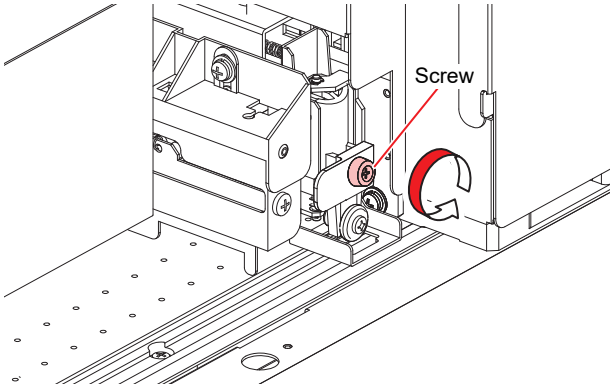

(2) Remove the cutter.

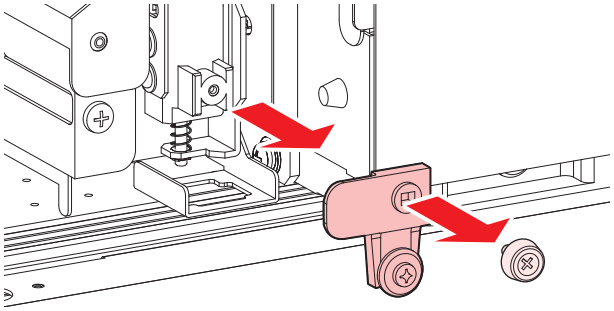

(3) Mount a new cutter.

(4) Tighten the screw to clamp the cutter.

5 Check the position of the media cutter.

- Lift up the media cutter by hand if it has dropped down.

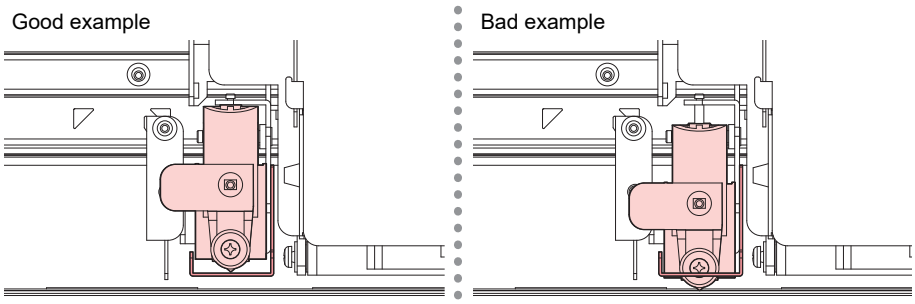

6 Once replacement is complete, close the cover, then press the [ENTER] key.

Waste Ink Tank Replacement

Ink used during head cleaning and other processes is collected in the waste ink tank at the lower right of the machine.

This product keeps track of the waste ink level. A "Check Waste Ink Tank" message appears when the preset level is reached. Use this a guide for replacing the waste ink tank.

- For a 2-liter tank, the preset level is 80 % (1.6 L).
- Continuing to use the product without disposing of the waste ink may result in waste ink overflowing from the waste ink tank. Visually check ink levels in the waste ink tank about once a week.

- Pay close attention to ventilation and be sure to wear safety glasses, gloves, and a mask when handling ink, maintenance liquid, waste ink, or other solutions used with the machine. Leaking ink may adhere to the skin or get into the eyes or mouth.

When "Check Waste Ink Tank" message appears

1 The "Check Waste Ink Tank" message appears on the display.

2 Check the waste ink levels in the waste ink tank.

- If you note any discrepancies from actual levels, proceed to the next step.
- If there is no discrepancy, replace (dispose of) the waste ink tank referring to ☞ "Replacing the Waste Ink Tank"(P. 115).

3 On the LOCAL mode screen, select [MENU] > [Maintenance], then press the [ENTER] key.

- The Maintenance menu is displayed.

4 Select [Waste Ink Tank], then press the [ENTER] key.

- "Replace Wasteinktank Level: 80 % (1.6 L)" appears on the display.

5 Select [Adjust Waste Ink Volume], then press the [ENTER] key.

6 Press ▲▼ to adjust the level.

7 Press the [ENTER] key once adjustment is complete.

Replacing the Waste Ink Tank

1 On the LOCAL mode screen, select [MENU] > [Maintenance], then press the [ENTER] key.

- The Maintenance menu is displayed.

2 Select [Waste Ink Tank], then press the [ENTER] key.

- "Replace Wasteinktank Level: 80 % (1.6 L)" appears on the display.

3 Select [Reset Waste Ink Volume], then press the [ENTER] key.

4 **Pull the waste ink tank stopper forward.**

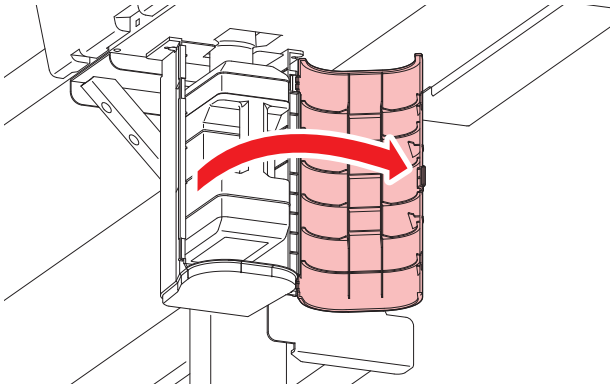

5 **Hold the handle on the waste ink tank and slide out.**

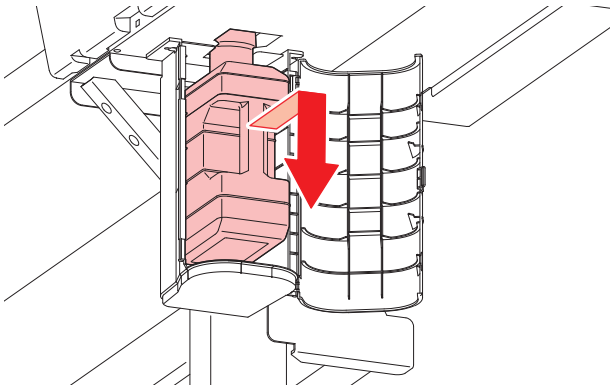

6 **Attach the cap to the removed waste ink tank, and use tape to prevent leakage of waste ink.**

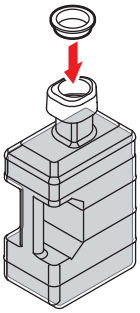

- When disposing of ink, maintenance liquid or other liquid used with the product, or containers or non-woven fabric contaminated with ink or other liquid, contact an industrial waste disposal operator or dispose of the product in accordance with the local laws and regulations.

7 **Mount a new waste ink tank.**

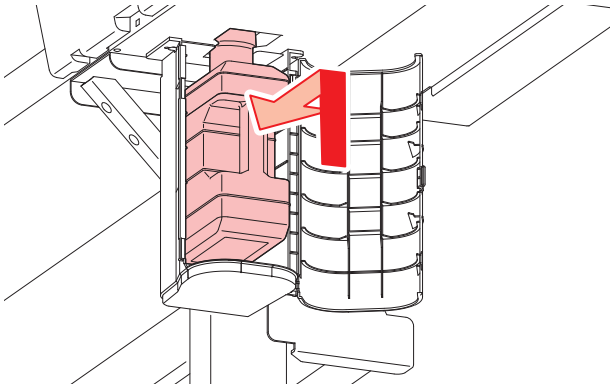

8 **Close the waste ink tank stopper.**

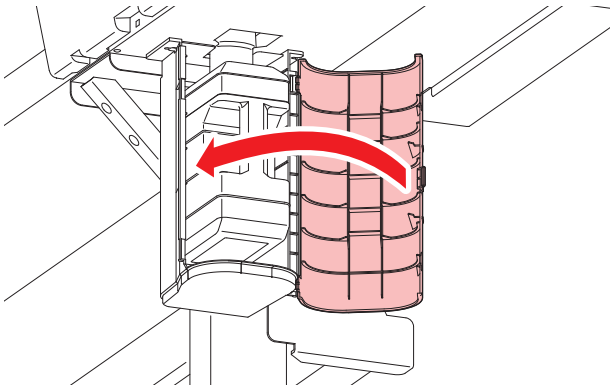

9 **Press the [ENTER] key.**

- The waste ink level will be reset.

4.4 Ink Cartridge Correction

Items required

Name	Overview
Ink cartridge case	Use with the ink pack and ink IC chip included with the ink pack mounted in the ink cartridge case.
Ink pack	
Ink IC chip	
Scales	Records the weight of the ink cartridge for calculating the remaining ink level. Provide scales capable of weighing in units of 1 g.

Correcting the ink cartridge weight

When the remaining ink level in the ink cartridge reaches the preset amount, the corresponding message, [Ink Level Low], [Ink Near End], [Ink Level End], [Ink End], [Ink cartridge check], appears on the display. The ink cartridge weight should be corrected, as it may differ from the actual weight.

- Note that if a value other than the actual weight is repeatedly registered, the ink IC chip may become unusable.
- Printing cannot continue when a warning is displayed.
- When "Replace ink pack" is displayed, replace with a new ink pack.

1 **A warning appears on the display.**

2 **Remove the ink cartridge from the indicated ink slot, then weigh it.**

- Weigh it with the ink pack left inside.

3 **Insert the ink cartridge in the ink supply unit.**

- The cartridge weight screen appears.

4 **Enter the measured weight of the ink cartridges, then press the [ENTER] key.**

- The amount of remaining ink in the ink packs is calculated and stored in the ink IC chips.
  - The ink cartridge weight can also be registered as follows:

(1) On the LOCAL mode screen, select [MENU] > [Maintenance], then press the [ENTER] key.
  - The Maintenance menu is displayed.

(2) Select [Ink Remaining Corr.] > [Cartridge Weight], then press the [ENTER] key.

(3) Select the corresponding ink slot, then press the [ENTER] key.
  - The selected slot is highlighted.

(4) Enter the measured weight of the ink cartridges, then press the [ENTER] key.

- If "ERROR614 Save failed" appears, check the following:
  (1) Check to confirm that the ink cartridge is fully inserted.
  (2) Check to confirm that the ink IC chip is inserted correctly.

Chapter 5 Troubleshooting

This chapter

This chapter describes corrective actions for troubleshooting and messages on the display.

Troubleshooting.....120
The power does not turn on. 120
Printing is not possible. 120
The media jams or the media is dirty. 120
The media keeps coming out..... 121
Image defects occur..... 121
Ejection failures occurred..... 122
The heater temperature does not rise to the specified value. 124
The ink has leaked out.....124
Problems Causing Messages to Appear 125
Warning Messages 125
Ink Error 127
Error Message 129
SYSTEM HALT 133

5.1 Troubleshooting

For information on troubleshooting, refer to this chapter. Refer to our website (https://mimaki.com/support/) for frequently asked questions (FAQs) about this product and customer support videos.

If the recommended corrective action does not resolve the problem, contact your local dealer or our service office.

The power does not turn on.

Points to check	Corrective action
Is the machine connected to the power outlet by the power cable?	Connect the power plug securely to the power outlet. ☞ "Connecting the Power Cable"(P. 31)
Are you using the power cable provided?	Use the power cable provided.
Is the main power supply turned on?	Turn on the main power supply. ☞ "Turning On the Power"(P. 32)
Is the [END/POWER] key on the operating panel turned on?	Turn the power on. ☞ "Turning On the Power"(P. 32)

Printing is not possible.

Points to check	Corrective action
Is a USB interface cable connected?	Connect the cable securely to the USB 2.0 port. ☞ "Using a USB Cable"(P. 35)
Is a LAN cable connected?	Connect the cable securely to the LAN port. ☞ "Using a LAN Cable"(P. 34)
Are you using a LAN cable approved by Mimaki?	Check the LAN cable type. ☞ "Using a LAN Cable"(P. 34)
Is the status lamp on the operating panel illuminated or flashing red?	An error has occurred. Check the message on the display. ☞ "Operating Panel"(P. 28)

The media jams or the media is dirty.

Points to check	Corrective action
Are you using the recommended media?	Make sure you are using the recommended media. https://mimaki.com/supply/inkjet.html
Are you using curled media?	Do not use curled media or media with folded ends.
Is the media skewed?	Reload the media. ☞ "Loading the Media"(P. 54)

Points to check	Corrective action
Does the media have ripples/surface irregularities or lift up?	If you are using roll media, use a smooth section of the media for initial feeding. You can also improve this problem by attaching the NITOFLON® tape provided on the platen. 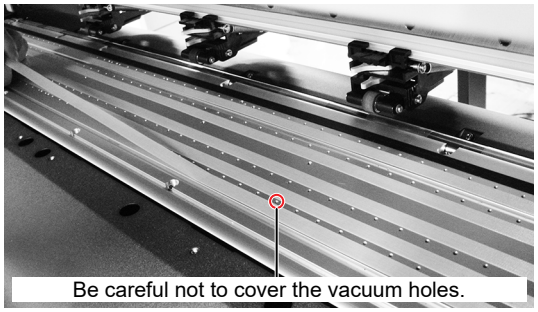 Be careful not to cover the vacuum holes. For more information, refer to the description on transporting media on the platen. https://mimaki.com/download/inkjet.html

The media keeps coming out

*Only when using the "Extend Unit [ON]" feature

Points to check	Corrective action
Is the media on the feed side rotating while still stuck to the roll?	• This can be resolved by using the anti-static kit (sold separately). Please contact a dealer, our nearest service office, or our service office.

Image defects occur.

Symptom	Corrective action
White streaks, blurriness, and dark streaks occur. (Carriage scan direction)	1. Remove any paper scraps or other debris adhering to areas over which the head passes (e.g., media holders). ☞ "Media Holder Cleaning"(P. 101)☞ "Platen Cleaning"(P. 101) 2. Perform the procedure described in ☞ "Head Cleaning"(P. 65). 3. Perform the procedure described in ☞ "Feed Correction"(P. 67). 4. Perform the procedure described in ☞ "Wiper Cleaning"(P. 93). 5. Perform the procedure described in ☞ "Cap Rubber Cleaning"(P. 95). 6. Perform the procedure described in ☞ "Carriage Underside Cleaning"(P. 97).
Text is double- or triple-printed in the media feed direction.	1. Perform the procedure described in ☞ "Feed Correction"(P. 67).
Offsetting occurs during bidirectional printing.	1. Perform the procedure described in ☞ "Correcting the Drop Position"(P. 68).
Ink droplets drip during printing.	1. Perform the procedure described in ☞ "Wiper Cleaning"(P. 93). 2. Perform the procedure described in ☞ "Cap Rubber Cleaning"(P. 95). 3. Perform the procedure described in ☞ "Carriage Underside Cleaning"(P. 97). 4. Perform the procedure described in ☞ "Head Cleaning"(P. 65). 5. Set auto maintenance. ☞ "Maintenance Menu"(P. 79)

Ejection failures occurred

Symptom	Corrective action
I want to fix nozzle clogging and ejection failures.	1. Please perform routine maintenance☞ "Maintenance Items and Timing"(P. 91). 2. ☞ "Head Cleaning"(P. 65)Please play on Normal or Hard difficulty. – Please check in☞ "Test Printing"(P. 63). – If nozzle clogging persists, please proceed to the next step. 3. ☞ "Print Head Nozzle Washing"(P. 122)Please allow the maintenance liquid to sit for about 1 minute. – Please check in☞ "Test Printing"(P. 63). – If nozzle clogging persists, please proceed to the next step. 4. ☞ "Print Head Nozzle Washing"(P. 122)Please repeat the procedure (let the maintenance liquid sit for about 10 minutes). – Please check in☞ "Test Printing"(P. 63). – If the nozzle clogging persists even after trying the troubleshooting steps above,contact your local distributor, our sales office, or service center.
I want to fix nozzle clogging and ejection failures.	1. Please perform routine maintenance☞ "Maintenance Items and Timing"(P. 91). 2. ☞ "Head Cleaning"(P. 65)Please play on Normal or Hard mode. – Please check in☞ "Test Printing"(P. 63). – If the nozzle clogging persists, please proceed to the next step. 3. Please perform☞ "Head Cleaning"(P. 65)(White Recovery Normal / White Recovery Hard). – Please check in☞ "Test Printing"(P. 63). – If nozzle clogging persists, proceed to the next step. 4. ☞ "Maintenance Menu"(P. 79)Please perform [White Maintenance]>[Hard]. – Execute this procedure only if you notice symptoms such as ink droplets falling from the nozzle surface. 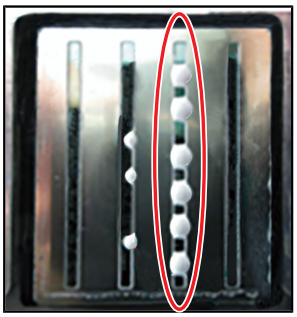 Nozzle surface when “Ink drips” occur from the nozzle surface 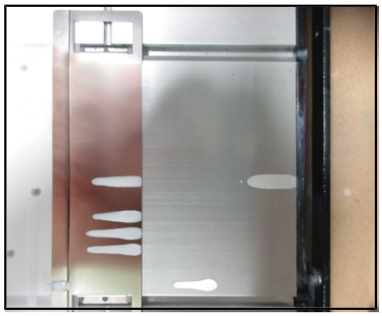 Ink from Ink drips adhering to the platen or other parts

Print Head Nozzle Washing

If ejection failures (e.g., nozzle clogging or deflection) remain unresolved even after head cleaning (☞ "Head Cleaning"(P. 65)), apply nozzle wash to the print head.

1 **On the LOCAL mode screen, select [MENU] > [Maintenance], then press the [ENTER] key.**

- The Maintenance menu is displayed.

2 **Select [Station Maint.] > [Nozzle Wash], then press the [ENTER] key.**

- The carriage moves over the platen.

3 **Open the front cover.**

4 **Clean the wiper and bracket.**

- ☞ "Wiper Cleaning"(P. 93)

5 **Press the [ENTER] key once cleaning is complete.**

- "Cap Cleaning Completed (Next) [ENT]" appears on the display.

6 **Clean the cap rubber.**

- ☞ "Cap Rubber Cleaning"(P. 95)

7 **Once cleaning is complete, close the cover, then press the [ENTER] key.**

- The cap is filled with maintenance liquid.

- Close the front cover. The cap cannot be filled with maintenance liquid unless the front cover is closed. This is also true if the maintenance liquid cartridge is empty.

8 **Open the front cover.**

- Check to confirm that the cap is filled with maintenance liquid.

- If not, use a syringe to draw up some maintenance liquid and fill until it almost overflows from the cap.

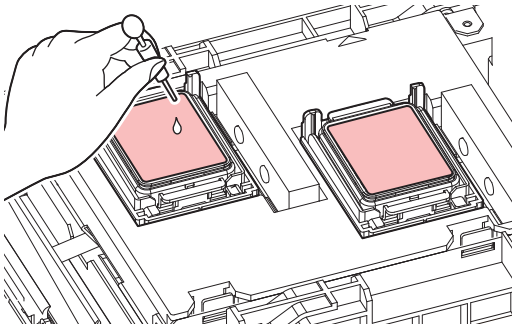

9 **Close the front cover.**

10 **Set the exposure time, then press the [ENTER] key.**

- Print nozzle washing starts. The elapsed time is displayed on the display.
- Cleaning is performed automatically once print nozzle washing has ended.

- If ejection failures (e.g., nozzle clogging or deflection) remain unresolved even after washing the nozzles several times, contact your local dealer or our service office.

The heater temperature does not rise to the specified value.

This may indicate a problem with the setting.

Points to check	Corrective action
Is the heater temperature set?	Set the heater temperature. ☞ "Setting the Heater Temperature"(P. 62) ☞ "Media Setting Menu"(P. 76)

The ink has leaked out

- If an ink leak occurs, turn off the main power immediately and unplug the power cable. Then, contact your local dealer or our service office.

5.2 Problems Causing Messages to Appear

If a problem arises, the buzzer sounds and a message appears on the display.

You can also check the local guidance. ☞ "Displaying Machine Information (Local Guidance)"(P. 30)

Take the appropriate action in accordance with the content of the message. If a message reappears even after taking the prescribed action, contact your local dealer or our service office.

Warning Messages

Message	Cause	Corrective action
MOTOR POWER OFF	• The motor is stopped due to initialization, for example after opening a cover.	• Wait until initialization is finished.
Replace NCU Ink Pad	• The ink absorber needs to be replaced.	• The NCU ink absorber must be replaced. Contact your local distributor, our sales office, or service center.
Replace NCU	• A problem was detected with the nozzle clogging assessment.	• The NCU must be replaced. Contact your local distributor, our sales office, or service center.
NCU Sensor Lv Low	• The sensor's sensitivity is impaired.	• Clean the NCU. ☞ "NCU Cleaning"(P. 96) • Replace the NCU if the error does not clear. Contact your local distributor, our sales office, or service center.
NCU Sens Adj Err H	• Sensor sensitivity adjustment failed.	
NCU Sens Adj Err L		
NCU Connect	• A problem was detected with the NCU connection.	• Turn off the power on the machine and turn it on after a while.
Ink Error	• An ink error occurred.	• Check the ink error details. ☞ "Ink Error"(P. 127)
COVER OPEN	• The cover is open.	• Close the cover.
Lower the clamp lever	• The clamp lever is raised.	• Lower the clamp lever. ☞ "Front"(P. 22)
Heater Temp Error Powered Off	• Displayed when the machine is restarted immediately after the "ERROR710 Heater Temp Error" occurs.	• If displaying again, contact your local distributor, our sales office, or service center.
Data Remain	• Print (RIP) data was received.	• Switch to REMOTE mode and start printing or clear the data and abort printing.
Temporary Suspension	• Printing has been paused.	• Switch to REMOTE mode and resume printing or clear the data and abort printing.
Can't Print/Cartridge	• An unusable ink IC chip is used.	• Replace with new ink cartridges.
No Media	• No media is loaded, or the sensors are faulty.	• Load the media. ☞ "Loading the Media"(P. 54)

Message	Cause	Corrective action
		• Clean the media sensor. ☞ "Media Sensor Cleaning"(P. 100)
Please load media	• No media is loaded, or the sensors are faulty.	• Load the media. ☞ "Loading the Media"(P. 54)
Media Undetected	• The media width has not been detected.	• Detect the media width. ☞ "Loading the Media"(P. 54)
Replace Wiper	• The wiping count exceeded the preset value.	• Replace the wiper, then reset the count. ☞ "Wiper Replacement"(P. 106)
Wiper Move Failure	• The wiper is not operating correctly.	1. Clean the wiper and around the wiper. ☞ "Wiper Cleaning"(P. 93) 2. Turn off the power on the machine and turn it on after a while.
Replace Wasteinktank	• The waste ink tank count exceeded the preset value (90%).	Automatic maintenance is not possible while the covers are open. Perform the following steps: 1. Check the waste ink levels in the waste ink tank. ☞ "When "Check Waste Ink Tank" message appears"(P. 115) 2. Replace the waste ink tank, then reset the waste ink level. ☞ "Replacing the Waste Ink Tank"(P. 115)
Check Waste Ink tank	• The waste ink tank count exceeded the preset value (80%).	1. Check the waste ink levels in the waste ink tank. ☞ "When "Check Waste Ink Tank" message appears"(P. 115) 2. Replace the waste ink tank, then reset the waste ink level. ☞ "Replacing the Waste Ink Tank"(P. 115)
WashLiquidCart.None	• No maintenance liquid cartridge is loaded.	• Load the maintenance liquid cartridge.
Please replace wash liquid cartridge	• The maintenance liquid has run out.	• Replace with a new maintenance liquid cartridge.
Washing liquid end	• The maintenance liquid has run out.	• Replace with a new maintenance liquid cartridge.
High ambient temp ** ˚ C	• Ambient temperatures are too high.	• Adjust ambient temperatures to temperatures within the specified range. Optimum print quality may not be possible unless ambient conditions are within the specified range. ☞ "Installation Precautions"(P. 15)
Low ambient temp ** ˚ C	• Ambient temperatures are too low.	
Auto-correction failed	• White media is not used. • The media is dirty. • The media lifts up. • There is dirt around the sensor.	• Load white and clean media. • Load media so it does not lift up. • Clean the area around the sensor. ☞ "Automatic Correction Sensor (DAS) Cleaning"(P. 98) • If automatic correction fails repeatedly, correct the position manually. [MENU] > [Setup] > [Feed Comp.] or [Drop.PosCorrect]
No maintenance for ** days	• Maintenance has not been performed for a preset period of time.	• Perform maintenance. ☞ "Maintenance Items and Timing"(P. 91)

Message	Cause	Corrective action
		– After using the [Station Maint.] > [Carriage Out] function to perform maintenance, this message will clear.
Feeding Wrong	• The media is biased. • The media lifts up. • The torque limiter is set too high.	• Check to confirm the media is loaded correctly. • Please reduce the torque limiter setting. • After verifying this, please re-detect the media width.
D- Pump Replacement	The recommended service life of the D-pump has expired.	• Contact your local distributor, our sales office, or service center.
Wh Damper Replacement	The recommended service life of the White damper has expired.	• Contact your local distributor, our sales office, or service center.
Please register theinstall date and time	The installation date and time have not been recorded.	• Contact your local distributor, our sales office, or service center.
Startup maintenance doneNozzle issue not resolved	The nozzle checking detected a loose nozzle, and maintenance procedures were executed, but the loose nozzle issue could not be resolved.	• Please check the nozzle status and execute maintenance to restore normal operation.☞ ""(P. 122)
**** Startup maintenance could not be performed.	Nozzle checking detected a leak, but the maintenance operation could not be performed. (Ink error, waste ink tank full, low ink levels, etc.)	• After replacing the ink pack, please check the condition of the nozzles. • Please perform maintenance as needed.
Nozzle check failed. Please clean NCU unit.	It could not be executed due to an NCU detection error.	• Clean the NCU. ☞ "NCU Cleaning"(P. 96)
Nozzle Check Failed****	Other NCUs: Could not be executed due to a status error. (NCU connection error, NCU pad replacement, etc.)	• If the message reappears, please contact your dealer, one of our service offices, or our service office.

Ink Error

Message	Cause	Corrective action
Ink End	• The ink has run out.	• Replace with new ink. ☞ "When Ink End is Displayed"(P. 42) • If you use UISS, you may perform cleaning.
No Cartridge	• No ink cartridge has been inserted in the ink supply unit.	1. Check to confirm the ink cartridge is inserted correctly. 2. Turn off the power on the machine and turn it on after a while.
Wrong Ink IC	• An error occurred with the information on the ink IC chip.	1. Check to confirm the ink cartridge is inserted correctly. 2. Turn off the power on the machine and turn it on after a while. 3. Replace with a new ink cartridge. ☞ "Replacing Ink"(P. 43)

Message	Cause	Corrective action
Ink Color	• The ink color registered on the IC chip is different from the ink color filled.	• Insert an ink cartridge of the correct ink color. ☞ "Replacing Ink"(P. 43)
Remaining ink 0	• The remaining ink level is 0 ml.	• Replace with new ink. ☞ "Replacing Ink"(P. 43)
Ink Type	• The ink type registered on the IC chip is different from the ink type filled.	• Insert an ink cartridge of the correct ink type. ☞ "Replacing Ink"(P. 43)
Expiration	• The ink has expired.	• Replace with new ink or use up as quickly as possible. Printing is possible. ☞ "Replacing Ink"(P. 43)
Expiration1Month	• The ink is one month past its expiration date.	
Expiration2Month	• The ink is two months past its expiration date and cannot be used.	• Replace with new ink. Printing is not possible. ☞ "Replacing Ink"(P. 43)
Ink cartridge check	• Occurs when the remaining ink level in the cartridge is below 100 ml.	1. Remove the ink cartridge, then weigh it. ☞ "Correcting the ink cartridge weight"(P. 118) 2. Enter the weight into the machine. ☞ "Correcting the ink cartridge weight"(P. 118) 3. Open the ink cartridge lid, then fold over the ink pack. 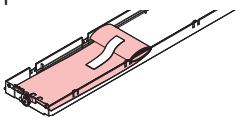 Set the ink pack as shown here and enter the cartridge weight
Ink Lvl End (1st time)	• Occurs when the remaining ink level in the cartridge is below 65 ml after "Ink cartridge check" has been displayed. – Not displayed if the ink pack has been folded over and the cartridge weight corrected (☞ "Correcting the ink cartridge weight"(P. 118)) after "Ink cartridge check" was displayed.	
Ink Level Low	• Occurs when the remaining ink level in the cartridge is below 60 ml.	1. Remove the ink cartridge, then weigh it. ☞ "Correcting the ink cartridge weight"(P. 118) 2. Enter the weight into the machine. ☞ "Correcting the ink cartridge weight"(P. 118)
INK NEAR-END	• Occurs when the remaining ink level is below 60 ml after correcting the cartridge weight (☞ "Correcting the ink cartridge weight"(P. 118)).	
Ink Lvl End	• Occurs when the remaining ink level in the cartridge is below 30 ml.	
Replace Ink Pack (Ink End)	• Occurs when the remaining ink level is below 30 ml after correcting the cartridge weight (☞ "Correcting the ink cartridge weight"(P. 118)).	1. Replace the ink pack. ☞ "Replacing Ink"(P. 43)

Message	Cause	Corrective action
remote invalid/unreplaced	• An unusable ink cartridge has not been replaced for an extended period and ink cannot be supplied, causing the ink in the corresponding path to stagnate.	• Replace with new ink cartridges. • If immediate replacement is not possible, perform the following: (However, the error will still reappear after a week. Replacement with a new cartridge is recommended.) – For color ink: Swap the cartridge for which the warning has occurred with a normal cartridge on the left or right. (In the case of a 6-color + W set, only M/Y can be swapped.) – For white ink: One set consists of four cartridges. Swap the cartridge for which the warning has occurred with one of the other normal cartridges. – Note that the error may reappear even after performing the above. [With 4-color + W set] 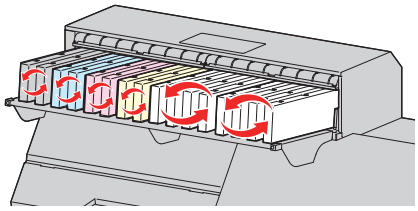
Wrong Cartridge	• The amount of ink used exceeded the preset value.	• Replace with new ink. ☞ "Replacing Ink"(P. 43) • Check to confirm the nozzle is not clogged.

Error Message

Error number	Message	Cause	Corrective action
04	PARAM ROM	• A problem was detected with the main PCB.	• Turn off the power on the machine and turn it on after a while.
108	HD THERMIS [1234]	• A problem was detected with print head temperature control.	• Turn off the power on the machine and turn it on after a while.
108	HD CONNECT [1234]	• A problem was detected with the print head connection.	
122	CHECK:SDRAM	• A problem was detected with the SDRAM.	• Turn off the power on the machine and turn it on after a while.
128	HDC FIFO OVER	• A problem was detected with the print head control PCB.	
128	HDC FIFO UNDER		
129	Battery Exchange	• The internal clock battery is spent and must be replaced.	• Contact your local distributor, our sales office, or service center.
12a	HDC SPEED	• A problem was detected with the print head control.	• Turn off the power on the machine and turn it on after a while.
130	HD DATA SEQ		

Error number	Message	Cause	Corrective action
148	E-LOG SEQ	• A log control abnormality was detected.	• Turn off the power on the machine and turn it on after a while.
151	Main PCB V1R2	• A problem was detected with the main PCB power supply circuit.	• Turn off the power on the machine and turn it on after a while.
152	Main PCB V2R5		
153	Main PCB V3R3		
154	Main PCB V05		
157	Main PCB VTT		
158	Main PCB V36-2		
15f	HEAD DRIVE HOT	• The COM drive has overheated.	• Turn off the power on the machine and turn it on after a while.
16e	Main PCB V3R3B	• A problem was detected with the main PCB power supply circuit.	
171	NEW HEAD CONNECT	• A new print head connection was detected.	
18a	Main PCB V_CORE	• A problem was detected with the main PCB power supply.	• Turn off the power on the machine and turn it on after a while.
18b	Main PCB V1R5B		
18c	Main PCB V12		
18e	FLS NOT COMP	• A problem was detected with the print head control.	• Turn off the power on the machine and turn it on after a while.
18f	OFSET START		
18f	OFSET END		
201	Command Error	• Data other than print (RIP) data was received, or a problem was detected with the print (RIP) data received.	1. Clear the data and resend. 2. Check the USB cable connection. ☞ "Using a USB Cable"(P. 35) 3. Use a compliant USB cable. ☞ "USB Connection Precautions"(P. 35) 4. Turn off the power on the machine and turn it on after a while.
202	Parameter Error	• A problem was detected with the print (RIP) data received.	
206	Print Mode Error	• Print (RIP) data was received with print parameters that do not allow printing.	• Change the output parameters and profile using RIP software.
20A	Driver Version	• Printing is not possible because the Mimaki driver version is old.	• Install the latest Mimaki driver available from: https://mimaki.com/download/inkjet.html
304	USB INIT ERR	• A problem was detected with the USB cable connection.	1. Check the USB cable connection. ☞ "Using a USB Cable"(P. 35) 2. Use a compliant USB cable. ☞ "USB Connection Precautions"(P. 35) 3. Turn off the power on the machine and turn it on after a while.
305	USB TIME OUT		
307	MCFD File IF Error	• A problem was detected when accessing the print condition data.	• Turn off the power on the machine and turn it on after a while.

Error number	Message	Cause	Corrective action
401	Motor X	• The X motor was overloaded.	1. Check to confirm the media is loaded correctly. ☞ "Loading the Media"(P. 54) 2. Open the front cover and check for anything that may obstruct carriage movement. 3. Turn off the power on the machine and turn it on after a while.
402	Motor Y	• The Y motor was overloaded.	
403	X Current	• An overcurrent error was detected in the X motor.	
404	Y Current	• An overcurrent error was detected in the Y motor.	
406	Wiper Move Failure	• The wiper origin could not be detected.	1. Clean the wiper and around the wiper. ☞ "Wiper Cleaning"(P. 93) 2. Turn off the power on the machine and turn it on after a while.
504	CLAMP UP	• The clamp lever is lifted.	• Lower the clamp lever.
505	Media Jam	• The media jam sensor was triggered.	1. Remove the media in contact with the carriage and reload with fresh media. ☞ "Loading the Media"(P. 54) 2. Open the front cover and check for anything that may obstruct carriage movement.
509	HDC POSCNT	• A problem was detected with position control.	• Turn off the power on the machine and turn it on after a while.
50a	Y Org Detect Error	• A problem was detected with Y origin detection (initialization).	
50c	Check Media With Sensor	• A problem was detected with media width detection.	1. Check the media loading position. ☞ "Loading the Media"(P. 54) 2. Clean the media width sensor. ☞ "Media Sensor Cleaning"(P. 100)
50f	L-SCALE BLACK	• A problem was detected with the linear scale.	• Turn off the power on the machine and turn it on after a while.
516	Media Set Position R	• The media was loaded outside the range of valid positions.	1. Check the media loading position. ☞ "Loading the Media"(P. 54) 2. Clean the media width sensor. ☞ "Media Sensor Cleaning"(P. 100)
528	Pump Motor	• A problem was detected with the pump motor.	• Turn off the power on the machine and turn it on after a while.
549	LEnc. Count DIO	• A problem was detected with the linear scale wiring to the DIO PCB.	• Turn off the power on the machine and turn it on after a while.
602	Ink End	• The ink has run out.	• Replace with new ink. ☞ "Replacing Ink"(P. 43)
608	Wrong Ink IC	• An error occurred with the information on the ink IC chip.	1. Check to confirm the ink cartridge is inserted correctly. 2. Turn off the power on the machine and turn it on after a while. 3. Replace with a new ink cartridge. ☞ "Replacing Ink"(P. 43)
627	Re-insert Cartridge	• The ink IC chip could not be read for a certain period of time.	1. Check to confirm the ink cartridge is inserted correctly.

Error number	Message	Cause	Corrective action
			2. Turn off the power on the machine and turn it on after a while.
628	Wrong Cartridge	• The amount of ink used exceeded the preset value.	• Replace with new ink. ☞ "Replacing Ink"(P. 43) • Check to confirm the nozzle is not clogged.
63c	Remaining ink 0	• The remaining ink level is 0 ml.	• Replace with new ink. ☞ "Replacing Ink"(P. 43)
64C	NCU Error	• The function is disabled due to an error.	• Turn off the power on the machine and turn it on after a while.
650	NCU Connect	• A problem was detected with the NCU connection.	
651	Replace NCU	• A problem was detected with the nozzle clogging assessment.	• The NCU must be replaced. Contact your local distributor, our sales office, or service center.
652	NCU Nzk Chk (Hw)	• A problem was detected with the nozzle clogging assessment.	• Clean the NCU. ☞ "NCU Cleaning"(P. 96)
653	NCU Nzk Chk (Mark)		
654	NCU Center Pos	• Printing position adjustment failed.	
655	NCU Flush Pos		
656	NCU SN Adjst	• Sensor sensitivity adjustment failed.	
657	Replace NCU Ink Pad	• The NCU ink absorber is full.	• The NCU ink absorber must be replaced. Contact your local distributor, our sales office, or service center.
658	NCU Sensor Lv Low	• The sensor's sensitivity is impaired.	• Clean the NCU. ☞ "NCU Cleaning"(P. 96) • Replace the NCU if the error does not clear. Contact your local distributor, our sales office, or service center.
65b	NCU Sens Adj Err H	• Sensor sensitivity adjustment failed.	
65c	NCU Sens Adj Err L		
702	Thermistor Connect	• A problem was detected with the thermistor connection.	• Turn off the power on the machine and turn it on after a while.
710	Heater Temp Error	• A problem was detected with the heater temperature.	• This error will be automatically resolved. If the error is not resolved, Turn off the power on the machine and turn it on after a while.
901	Operation Error	• The function is disabled due to an error.	• Check the error details.
902	Data Remain	• Print (RIP) data was received.	• Switch to REMOTE mode and start printing or clear the data and abort printing.
90d	No Head Selected	• A problem was detected with the print head.	• Turn off the power on the machine and turn it on after a while.
90f	Print Area Short	• The media is too small for the print.	• Replace with wider or longer media.

Error number	Message	Cause	Corrective action
			• If the printable area is reduced due to a shift in the origin, move the origin to increase the size of the printable area.
b1b	BaseIO PCB Vpow-s	• A problem was detected with the Base IO PCB power supply.	• Turn off the power on the machine and turn it on after a while.
b1c	BaseIO PCB V24		
b1d	BaseIO PCB V24-A		
b21	SLIDER1 PCB V3R3	• A problem was detected with the slider PCB power supply.	• Turn off the power on the machine and turn it on after a while.
b22	SLIDER1 PCB V2R5		
b23	SLIDER1 PCB V1R8		
b24	SLIDER1 PCB V1R2		
d09	HD MEMORY [1234]	• A problem was detected in the head internal memory.	• Turn off the power on the machine and turn it on after a while.

SYSTEM HALT

Error number	Message	Corrective action
406	WIPER ORG	1. Clean the wiper and around the wiper. ☞ "Wiper Cleaning"(P. 93) 2. Turn off the power on the machine and turn it on after a while.

- If any other SYSTEM HALT number is displayed, Turn off the power on the machine and turn it on after a while.

Chapter 6 Appendix

This chapter

This chapter describes the machine specifications.

Specifications 136
LICENSE Library 139

6.1 Specifications

Item			TxF330-800
Print head	Type		On-demand piezo head
	Specifications		Two staggered heads with 400 nozzles × 8 rows each
	Resolution	Y	600 dpi, 1,200 dpi
		X	600 dpi, 900 dpi, 1,200 dpi
Ink Type			PHT50
Ink set			4-color + W: Y, M, C, K, W 6-color + W: Y, M, C, K, SB, PP, W
Media	Type		Film
	Maximum printing width*1		800 mm
	Maximum width		810 mm
	Minimum width		210 mm
	Thickness		Max. 1.0 mm
	Roll external diameter*2		Max. 250 mm
	Roll weight*2, 3		Max. 45 kg
	Paper core internal diameter		2 inches or 3 inches
	Printing face		Exterior/interior
	Roll end		Taped or loosely affixed to paper core
Print margins	Roll		Left/right: 15 mm (default) Front: 120 mm Rear: 150 mm
	Leaf		Left/right: 15 mm (default) Front: 120 mm Rear: 150 mm
Distance accuracy*4	Absolute accuracy		±0.3 mm or ±0.3 % of specified distance, whichever is greater
	Duplicability		±0.2 mm or ±0.1 % of specified distance, whichever is greater
Perpendicularity			±0.5 mm/1,000 mm
Media skew			Not more than 5 mm/10 m
Printing gap			Manual, three settings (1.6/2.1/2.6)
Origin alignment			LED pointer
Ink supply			Ink cartridge
Maintenance liquid feed			Cartridge
Waste Ink Tank			Bottle type (2,000 ml)
Feeding unit			Provided
Media heater			PRE/PRINT/AFTER: 50/50/50°C

Item		TxF330-800
		3-channel independent control
NCU (Nozzle clogging detection)		Provided
DAS (Automatic correction function)		Provided
Interface	Data transfer function	**Ethernet 1000BASE-T (recommended)**[*5, 6], USB 2.0 Hi-speed [*6, 7]
Command		MRL-V
Languages		English, Japanese, Chinese, Turkish, Portuguese, Spanish, Italian, Korean
Noise levels	During standby	Not more than 45 dB (FAST-A, 1 m on all sides)
	Continuous operation	Not more than 65 dB (FAST-A, 1 m on all sides)
	Non-continuous operation	Not more than 70 dB (FAST-A, 1 m on all sides)
Compliance with standards		VCCI Class A, FCC Class A, IEC 62368-1 ETL compliance, CE marking (EMC Directive, Low Voltage Directive, Machinery Directive, RoHS Directive), CB certified, REACH, EnergyStar, RCM marking, KC certified
Power supply specifications[*8]		Single-phase 100 to 120 V AC ±10%/8 A, single-phase 200 to 240 V AC ±10%/4.5 A, 50/60 Hz ±1 Hz
Power consumption	Maximum[*9]	100 to 120 V AC: Max. 800 W 200 to 240 V AC: Max. 1,100 W
	Standard	300 W
	Minimum[*10]	4.9 W or less
Installation environment[*11]	Permissible ambient temperature	20 to 30 °C
	Relative humidity	35 to 65 %RH (no condensation)
	Temperature range in which accuracy is guaranteed	20 to 25 °C
	Temperature gradient	Not more than ±10 °C/h
	Dust	0.15 mg/m^3 (typical office)
	Maximum operating altitude	2,000 m
External dimensions[*12]	Width	2,084 mm (2,240 mm)
	Depth	700 mm (922 mm)
	Height	1,389 mm (986 mm)

Item	TxF330-800
Weight*12	161 kg (204 kg)

*1. With setup menu margins set to the minimum (5 mm) on either side.
*2. External diameter and weight after winding media.
*3. Free of sagging due to weight.
*4. Excluding media size variation and initial loading fluctuations.
*5. If anything other than “1000 Mbps” is displayed in the local guidance, printing is not possible.
*6. Print speed may be reduced depending on your connection environment or the print data.
*7. Data may be transferred to the machine too slowly, causing the carriage to pause at the left-hand or right-hand end during printing.
*8. Excluding options.
*9. Varies depending on print mode.
*10. In sleep.
*11. Ink ejection consistency may decrease in conditions outside this range.
*12. The figures in parentheses indicate package dimensions.

6.2 LICENSE Library

Mimaki printer Firmware

Copyright @2020 MIMAKI ENGINEERING CO.,LTD. All rights reserved.

This product contain open source software listed in the tables below.

Component	License
StarterWare for ARM® based TI Sitara Processors	BSD-TI

The following license terms and conditions shall apply to the open source software listed in the table above:

BSD-TI

Copyright (C) 2010 Texas Instruments Incorporated - http://www.ti.com/

Redistribution and use in source and binary forms, with or without modification, are permitted provided that the following conditions are met:

1. Redistributions of source code must retain the above copyright notice, this list of conditions and the following disclaimer.
2. Redistributions in binary form must reproduce the above copyright notice, this list of conditions and the following disclaimer in the documentation and/or other materials provided with the distribution.
3. Neither the name of Texas Instruments Incorporated nor the names of its contributors may be used to endorse or promote products derived from this software without specific prior written permission.

THIS SOFTWARE IS PROVIDED BY THE COPYRIGHT HOLDERS AND CONTRIBUTORS "AS IS" AND ANY EXPRESS OR IMPLIED WARRANTIES, INCLUDING, BUT NOT LIMITED TO, THE IMPLIED WARRANTIES OF MERCHANTABILITY AND FITNESS FOR A PARTICULAR PURPOSE ARE DISCLAIMED. IN NO EVENT SHALL THE COPYRIGHT OWNER OR CONTRIBUTORS BE LIABLE FOR ANY DIRECT, INDIRECT, INCIDENTAL, SPECIAL, EXEMPLARY, OR CONSEQUENTIAL DAMAGES (INCLUDING, BUT NOT LIMITED TO, PROCUREMENT OF SUBSTITUTE GOODS OR SERVICES; LOSS OF USE, DATA, OR PROFITS; OR BUSINESS INTERRUPTION) HOWEVER CAUSED AND ON ANY THEORY OF LIABILITY, WHETHER IN CONTRACT, STRICT LIABILITY, OR TORT (INCLUDING NEGLIGENCE OR OTHERWISE) ARISING IN ANY WAY OUT OF THE USE OF THIS SOFTWARE, EVEN IF ADVISED OF THE POSSIBILITY OF SUCH DAMAGE.

Index

A

AC inlet 23
Adjust Waste Ink Volume 115
Auto Cleaning 81
Auto Maint. 80
Auto Nozzle Recovery 80
Auto Power-off 84
Auto Power-on 85
Auto Remote 85
Auto-correction 98, 126
Auto-correction (DAS) 76

C

Cancel 28
Cap 53, 91, 95, 107
Cap Replacement 79
Capping Use Days 88
Capping station 22, 24
Carriage 22, 24, 53, 79, 91, 97
Carriage movement 28
Carriage Out 79
Clamp lever 22, 23
Cleaning 79
Color profile 38
Custody Wash 79, 104
Cutting slot 25

D

DAS 91, 98
DAS (Dot Adjustment System) 76
Delete MediaInfo 78
Detail Setting 77
DISCLAIMERS 5
Display 28, 29
Display language 86
Drop.PosCorrect 30, 50, 68, 76
Drying Time 84

E

Ejection failures 79, 81, 120
[END/POWER] key 27, 28, 32, 33
[ENTER] key 28
Environment Setting Menu 86
Error 28, 125
Error History 88
Exhaust fan box 109
Exhaust fan filter 109

F

FCC 5
Feed Comp. 30, 49, 66, 67, 76
Feed Speed 78
Feeding Before Cut 85
Feeding unit 23, 55, 84
[FUNCTION] key 28, 30
Function Setting Menu 84

G

Grit roller 22, 24

H

Head Cleaning 28, 65
Head height 51
Heater 62, 77
Height adjustment lever 52

I

Ink cartridge case 118
Ink cartridge check 40, 118
Ink discharge channel 91, 99
Ink End 42, 118
Ink Error 29
Ink IC chip 118
INK LVL END 118
INK LVL LOW 118
INK NEAR-END 118
Ink pack 118
Ink Remaining Corr. 81
Ink replacement 88
Ink status 29
Ink status indicator lamp 26

Ink Supply Unit 22, 26
Inlet 31
Installation guide 38, 39
Installation Space 16
Interference 5
interlock 17
Interval Wiping 81

J

[JOG] key 28
Judgment Condition 80

K

Key Buzzer 86
KeyLife 87

L

LAN cable 34
LAN port 23
LANGUAGE 86
List 88
Local guidance 30
LOCAL mode 28, 29
Logical Seek 84

M

Machine Status Menu 88
Main power switch 23, 27, 32
Maintenance 88
Maintenance cover 22
Maintenance History 88
Maintenance liquid cartridge 23
Maintenance Menu 79
MAPS (Mimaki Advanced Pass System) 76
Margin 85
Media 54
Media feed 28
Media holder 91, 101
Media Information 77
Media Name Change 78
Media Remain 77
Media Sensor 23, 26, 91, 100

Media Setting Menu 76
Media Width 77
MENU mode 29
Mimaki driver 38
MRA (Mimaki Remote Access) 86

N

NCU 24, 91, 96
Network 86
NOT-READY mode 29
Nozzle Check 80, 83
Nozzle clogging 83
Nozzle Recovery 79, 81
Nozzle Wash 79, 80, 122

O

Operating Panel 22, 28

P

PIN code 87
Pinch roller 22, 24, 110
Platen 22, 25, 91, 101
Post-heater 22, 62
Power cable 31
Power outlet 31
Power plug 31
Power Setting 84
Preheater 23, 62
Print Area 88
Print heater 62
Print Length 88
Print Maint. 81
Print origin 72
Printing Check 80
Pump Tube Cleaning 79, 99

R

RasterLink 38, 39, 70, 71, 84, 85
Receive buffer 73
Reference guide 71
Refresh 81
Remaining ink 29

Remote Control 86
REMOTE mode 28, 29
Replace Wiper 79, 88, 106
Roll holder 57

S

[SEL] key 28
Sensor sensitivity 125, 132
Smoothing Level 77
Space Btwn PP. 85
Space Feed Mode 85
Station Maint. 79
Status lamp 28
Switching hub 34
SYSTEM HALT 28

T

Test Printing 28, 63, 79
Time Set 86

U

Unit Setting 86
Usage 88
USB interface cable 35
USB port 23
Use Time 88

V

Vacuum Fan 77
Version 88
View Feed 85

W

Warning Label 18
wash tray cleaning 79
Wash tray filling 79
Waste Ink Tank 22, 81, 88, 91, 115
White Maintenance 81
WhiteSpace Setting 85
Wiper 53, 79, 91, 93, 106
Wiper maintenance 79
WIPING 88

MEMO

Operation manual

Octber, 2026

MIMAKI ENGINEERING CO.,LTD.
2182-3 Shigeno-otsu, Tomi-shi, Nagano 389-0512 JAPAN

D203944-11-15102026

AI

AT

© MIMAKI ENGINEERING CO., LTD.2026

FW : 1.1